NETWORK MANAGER'S GUIDE FOR THE IBM PC

CORVUS

Notice

Corvus Systems, Inc. reserves the right to make changes in the product described in this manual at any time without notice. Revised manuals will be published as needed and may be purchased from authorized Corvus Systems dealers.

Copyright

This manual is copyrighted. All rights reserved. This document may not, in whole, or in part be copied, photocopied, reproduced, translated, or reduced to any electronic medium or machine readable form without prior consent in writing from:

Corvus Systems, Inc.
2100 Corvus Drive
San Jose, CA. 95124

Telephone: (408) 559-7000
TELEX: 278976

(c) Copyright 1985 by Corvus Systems, Inc. All rights reserved.

Corvus(TM), Corvus Systems(TM), Corvus Concept(TM), OmniTalk(TM) Transporter(TM), Omninet(TM), LogiCalc(TM), EdWord(TM), The Bank(TM), Bank Tape(TM), OmniDrive(TM), ISYS(TM), TLC(TM), Constellation(R) and Mirror(R) are trademarks of Corvus Systems, Inc.

Mirror(R), U.S. Patent #4,380,047 International patents pending
Corvus Concept(TM), patent pending
Omninet(TM), patent pending

IBM(R) is a trademark of International Business Machines Corporation.

MS(TM)-DOS is a trademark of Microsoft Corporation.

Part Number: 7100-06074-02

Release Date: January 1986

Printed in the U.S.A.

Limited Warranty

Corvus warrants its hardware products against defects in materials and workmanship for a period of 180 days from the date of purchase from any authorized Corvus Systems dealer. If Corvus receives notice of such defects during the warranty period, Corvus will, at its option, either repair or replace the hardware products that prove to be defective. Repairs will be performed and defective parts replaced with either new or reconditioned parts.

Corvus software and firmware products that are designed by Corvus for use with a hardware product, when properly installed on that hardware product, are warranted not to fail to execute their programming instructions due to defects in materials and workmanship for a period of 180 days. If Corvus receives notice of such defects during the warranty period, Corvus shall repair or replace software and firmware media which do not execute their programming instructions due to such defects. Corvus does not warrant that the operation of the software, firmware, or hardware shall be uninterrupted or error free.

The software and firmware programs are provided "AS IS" without a warranty of any kind. The entire risk as to the quality and performance of the program is with you.

Limited Warranty service may be obtained by delivering the product during the 180 day warranty period with proof of purchase date to Corvus Systems. YOU MUST CONTACT CORVUS CUSTOMER SERVICE TO OBTAIN A "RETURN AUTHORIZATION CODE" PRIOR TO RETURNING THE PRODUCT. THE RAC (RETURN AUTHORIZATION CODE) NUMBER ISSUED BY CORVUS CUSTOMER SERVICE MUST APPEAR ON THE EXTERIOR OF THE SHIPPING CONTAINER ORIGINAL OR EQUIVALENT SHIPPING MATERIALS MUST BE USED. If this product is delivered by mail, you agree to insure the product or assume the risk of loss or damage in transit, to prepay shipping charges to the warranty service location and to use the original shipping container. Contact Corvus Systems or write to Corvus Customer Service, 2100 Corvus Drive, San Jose, CA, 95124 prior to shipping equipment.

ALL EXPRESS AND IMPLIED WARRANTIES FOR THIS PRODUCT, INCLUDING THE WARRANTIES OF MERCHANTABILITY AND FITNESS FOR A PARTICULAR PURPOSE, ARE LIMITED IN DURATION TO A PERIOD OF 180 DAYS FROM DATE OF PURCHASE, AND NO WARRANTIES, WHETHER EXPRESS OR IMPLIED, WILL APPLY AFTER THIS PERIOD. SOME STATES DO NOT ALLOW LIMITATIONS ON HOW LONG AN IMPLIED WARRANTY LASTS, SO THE ABOVE LIMITATIONS MAY NOT APPLY TO YOU.

IF THIS PRODUCT IS NOT IN GOOD WORKING ORDER AS WARRANTED ABOVE, YOUR SOLE REMEDY SHALL BE REPAIR OR REPLACEMENT AS PROVIDED ABOVE. IN NO EVENT WILL CORVUS SYSTEMS BE LIABLE TO YOU FOR ANY DAMAGES, INCLUDING ANY LOST PROFITS, LOST SAVINGS OR OTHER INCIDENTAL OR CONSEQUENTIAL DAMAGES ARISING FROM THE USE OF OR INABILITY TO USE SUCH PRODUCT, EVEN IF CORVUS SYSTEMS OR AN AUTHORIZED CORVUS SYSTEMS DEALER HAS BEEN ADVISED OF THE POSSIBILITY OF SUCH DAMAGES, OR FOR ANY CLAIM BY ANY OTHER PARTY.

SOME STATES DO NOT ALLOW THE EXCLUSION OR LIMITATION OF INCIDENTAL OR CONSEQUENTIAL DAMAGES FOR CONSUMER PRODUCTS, SO THE ABOVE LIMITATIONS OR EXCLUSIONS MAY NOT APPLY TO YOU.

THIS WARRANTY GIVES YOU SPECIFIC LEGAL RIGHTS, AND YOU MAY ALSO HAVE OTHER RIGHTS WHICH MAY VARY FROM STATE TO STATE.

Network Manager's Guide

for the IBM PC

Contents

4 **About This Guide**
7 **Conventions**
9 **Before You Begin**

12 PART ONE: SETTING UP THE HARDWARE AND SOFTWARE

13 **Introduction to Part One**

15 **Chapter 1: Setting up the Hardware**
16 Contents
17 Introduction
17 Setting up the OmniDrive
24 Installing the Transporter Card
30 Attaching the Tap Cable and the Convenience Connector
31 What's Next?

33 **Chapter 2: Starting an IBM PC Network**
34 Contents
35 Introduction
36 Preparing for Constellation II
45 Initializing the OmniDrive
67 What's Next?

69 **Chapter 3: Adding an OmniDrive to a Network of IBM PCs**
70 Contents
71 Introduction
72 Preparing for Constellation II
73 Initializing the OmniDrive
97 Updating the Firmware
104 Introduction to Merging User Tables
110 What's Next?

111 Chapter 4: Adding an IBM PC to a Network of Other Computer Types
112 Contents
113 Introduction
114 Preparing for Constellation II
125 Adding to an Existing OmniDrive
140 What's Next?

141 Chapter 5: Adding an IBM PC and an OmniDrive to a Network of Other Computer Types
142 Contents
143 Introduction
144 Preparing for Constellation II
146 Initializing the OmniDrive
170 Updating the Firmware
178 Introduction to Merging User Tables
186 Merging Boot Files
192 What's Next?

193 PART TWO: NETWORK MANAGEMENT

194 Introduction to Part Two

195 Chapter 6: An Overview of Network Management
196 Contents
197 Introduction to Constellation II
198 Planning the Network
199 Volumes
201 User Accounts
204 Network Summary
205 Menu Overview
207 What's Next?

209 **Chapter 7: Setting up and Managing Your Network**
210 Contents
212 Introduction
212 Entering Constellation II
218 Network Checklist
222 User or Device Manager
231 Volume Manager
245 Access Manager
254 Semaphore Manager
264 What's Next?

265 **Chapter 8: Network Printing and File Transfer**
266 Contents
267 Introduction
270 Creating the Pipes Volume
271 Setting the Network Printer Driver Parameters
274 Setting up an IBM PC to Print Files
284 Maintaining the Pipes Area
292 What's Next?

293 **Appendix A: Error Messages**

303 **Appendix B: Network Manager's Records**

309 **Appendix C: CORMS33 Files**

313 **Appendix D: Upgrading Methods**

321 **Appendix E: Corvus Technical Documents**

327 **Appendix F: Corvus Software Development Kits**

About this Guide

The *Network Manager's Guide for the IBM PC* shows you, the network manager, how to set up and maintain a network system of IBM PCs, PC XTs and PC ATs (or IBM PCs and other computer types) using Corvus Constellation II software.

Constellation II software enables you to create a network system on which users of similar and dissimilar computer types can exchange information and share peripherals, such as drives and printers. Constellation II also allows you to control access to information on the network.

There are two parts to this guide:

Part One: Setting up the Hardware and Software

Part One explains how to set up the hardware and software for your Constellation II network of IBM PCs. Chapter 1 shows you how to install a new OmniDrive on your network. Chapters 2 through 5 explain how to set up four types of networks. **You need to read only one of chapters 2 through 5—the one that applies to your network setup.**

The *Guide Flowchart* below will help you to decide which chapters you need to read in this guide. Choose the heading that applies to your network setup and then read the chapters in the order that they are indicated. Use the color codes in the flowchart to help you find the appropriate chapters.

Guide Flowchart

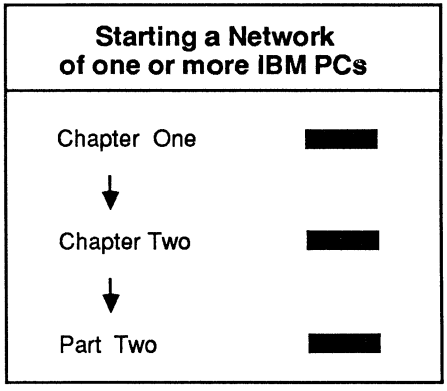

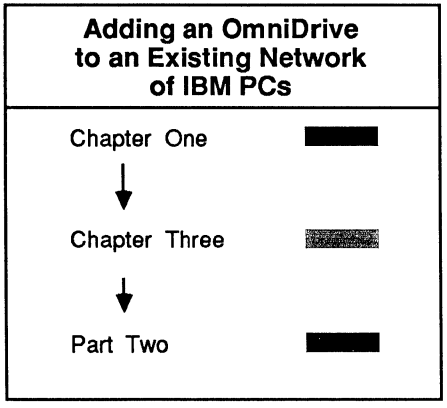

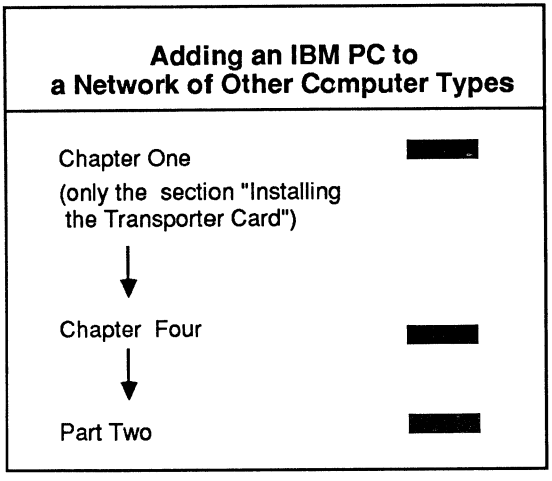

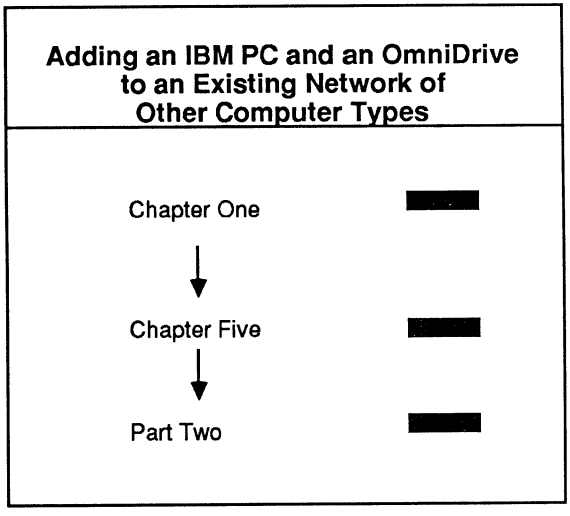

Part Two: Network Management

Part Two explains how to plan, set up and manage your network. At the end of Part Two, you will have a network of IBM PCs (and other computer types) on which users can exchange information and share printers and OmniDrives.

Conventions

Throughout this guide, *type* means to enter two or more characters on the computer keyboard. Type all words, symbols, spaces and punctuation to the right of *type* exactly as shown. Do not add or leave out punctuation marks at the end of the statement.

Examples:

Type COPY B:*.DOC

Type DIR C:

Do not type the spaces between *type* and the first character to its right.

Throughout this guide, *press* means to enter a single character or symbol on the computer keyboard. When a keytop symbol appears, press the key to which it refers. Do not type out each letter of the word in the keytop symbol.

Examples:

Press Y

Press [RETURN]

When the command *type* or *press* appears in boldface in a sentence or paragraph, enter the information indicated.

Example:

Type your user name and password and **press** [RETURN].

Throughout this guide, the term **PC** stands for an IBM PC, XT, AT, or IBM compatibles. Constellation II software supports all of these computers.

The variables x.xx in the screen displays stand for software revision numbers.

The variable NN in the log-on displays stands for the number of the server that is providing the boot information.

The terms **boot** and **reboot** refer to loading and reloading the operating system into a computer.

The term **server** refers to the combination of a disk drive with a separate disk server. Disk drives need an external server to communicate on the network while the OmniDrive has a built-in server.

The term **mass storage system** refers to an OmniDrive, or a disk drive with a disk server or a Corvus Bank.

The term **Omninet** refers to a Corvus network system. **Network** refers to one or more computers that use Constellation II software and are attached to one or more servers.

The term **default** refers to a value or option that is assigned by Constellation II when another has not been specified by the user.

Before You Begin

What You Should Know

The *Network Manager's Guide for the IBM PC* assumes that you are familiar with the MS-DOS operating system.

This guide also assumes that there will be one person acting as network manager. Only one person needs to invest time and effort to keep a network running smoothly. It is also easier to control security on the network when only one person knows the system management names and passwords.

Users will be aware of only the Corvus MS-DOS utilities described in the *Network User's Guide for the IBM PC*—all other functions that are familiar to the network manager are transparent to the MS-DOS user.

Required Reading

After you have read this guide, you will need to read the *Network User's Guide for the IBM PC.* The network manager needs to be familiar with the Constellation II utilities *mount manager, spool, and despool* that are explained in the user's guide.

The *Network Diagnostics Guide for the IBM PC* is a companion to the network manager's guide and should be referred to if your network has a problem that involves diagnostics.

You will also need to have the *IBM Disk Operating System* guide and, if you have more than one computer on your network, the *Omninet Hardware Installation Guide* available for reference.

Required Hardware and Software

You will need an IBM Personal Computer with 128 kilobytes of memory, at least one double-sided, double-density floppy diskette drive, and the MS-DOS operating system to install Constellation II software. Only versions of MS-DOS 2.0 or greater can be used with this release of Constellation II. Version 1.1 cannot be substituted.

The following items are needed to connect the IBM Personal Computer and the OmniDrive for system generation:

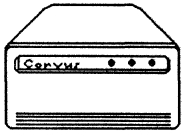

OmniDrive

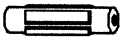

Convenience Connector

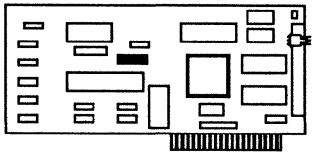

Corvus Transporter tm
Card for the IBM PC

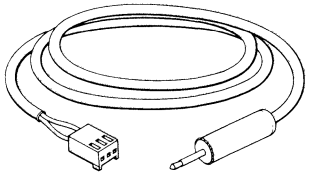

Two tap cables

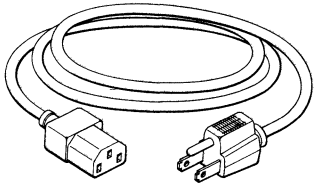

Power Cord

Initializing the OmniDrive requires three diskettes:

CORMS31
CORMS32
CORMS33

IBM MS-DOS system diskette (2.0 or greater)

PART ONE:

Setting up the Hardware and Software

Introduction to Part One

Choose the heading in italics in the flowchart below that applies to your network setup and read the chapters that are indicated. Use the color codes in the flowchart to help you find the appropriate chapters.

Part One Flowchart

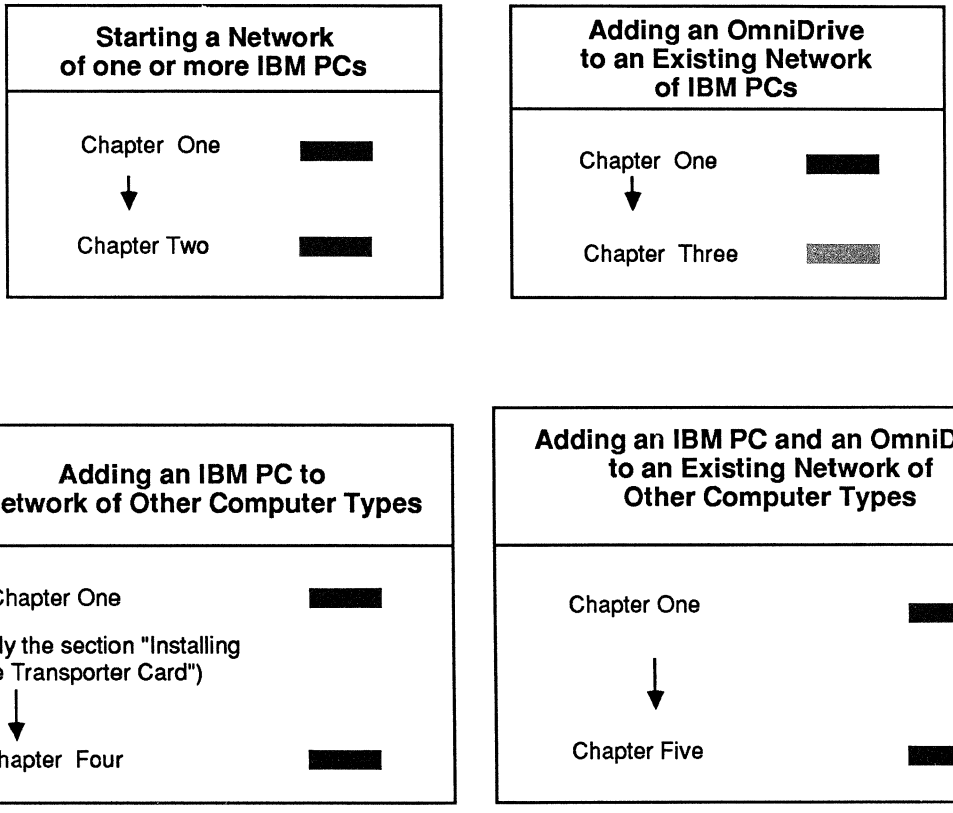

PART ONE
Chapter 1

Setting up the Hardware

Contents

17 **Introduction**

17 **Setting up the OmniDrive**

24 **Installing the Transporter Card**

30 **Attaching the Tap Cable to the Convenience Connector**

31 **What's Next?**

Introduction

Follow the steps in this section to set up your OmniDrive. Ignore any other installation instructions that were included with the OmniDrive.

Setting up the OmniDrive

Before beginning to set up the OmniDrive, note these points:

- o Handle the OmniDrive with care.
- o Place the OmniDrive on its base and on a flat surface.
- o To allow for proper ventilation within the OmniDrive make sure the air vent on the back panel is never blocked.

Set up the OmniDrive by following the steps below.

1. **Unpack the OmniDrive.**

   Save the packing materials so that they can be reused when transporting the drive.

2. **Put the OmniDrive on a flat surface.**

   A 15-foot (4.5 m) tap cable was included with the OmniDrive, and another 15-foot tap cable was supplied with the Transporter card. The two cables will be joined together with the convenience connector. Put the OmniDrive in a convenient location within 30 feet (9 m) of your IBM PC.

3. **Set the device address for the OmniDrive.**

   In the upper right corner of the back panel of the OmniDrive is a switch unit marked *Address.*

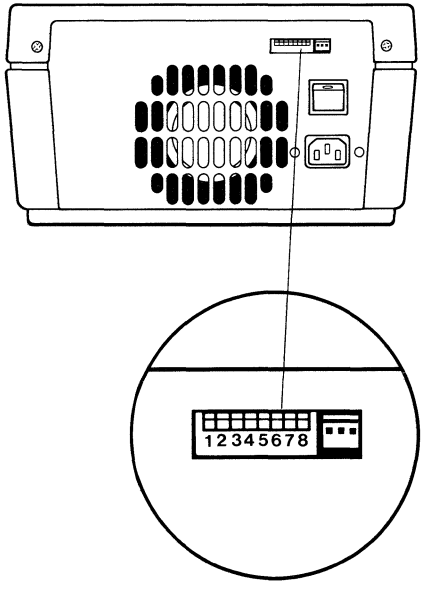

OmniDrive and Switch Unit

Choose an address from 0 to 63 for the OmniDrive or server. All devices that will be part of the network need unique addresses.

If this will be the first OmniDrive or server on your network, set it to address 0. If you will have have more than one OmniDrive on your network system, you must set each OmniDrive to a unique address.

When a switch is pushed towards the number, the switch is set to *on.*

On an OmniDrive, switch 8 is the bias switch. On a server, switch 7 is the bias switch. **Switches 7 and 8 are not used for setting the device address.** Only one OmniDrive or server on a network should have the bias switch *on* or pushed towards the number.

To set the address for your first OmniDrive to 0, set the bias switch 8 towards the number or *on.* Set all other switches towards the number.

To set the address for your first server to 0, set the bias switch 7 towards the number or *on.* Set all other switches towards the number (or zero).

Check the chart on the following page to set addresses and be sure that only one server or OmniDrive has the bias switch on and that each OmniDrive or server has a unique address.

Write the address in the Omninet Device Table in Appendix B for future reference.

Address	Switch Setting						Address	Switch Setting					
	1	2	3	4	5	6		1	2	3	4	5	6
0	■	■	■	■	■	■	32	■	■	■	■	■	□
1	□	■	■	■	■	■	33	□	■	■	■	■	□
2	■	□	■	■	■	■	34	■	□	■	■	■	□
3	□	□	■	■	■	■	35	□	□	■	■	■	□
4	■	■	□	■	■	■	36	■	■	□	■	■	□
5	□	■	□	■	■	■	37	□	■	□	■	■	□
6	■	□	□	■	■	■	38	■	□	□	■	■	□
7	□	□	□	■	■	■	39	□	□	□	■	■	□
8	■	■	■	□	■	■	40	■	■	■	□	■	□
9	□	■	■	□	■	■	41	□	■	■	□	■	□
10	■	□	■	□	■	■	42	■	□	■	□	■	□
11	□	□	■	□	■	■	43	□	□	■	□	■	□
12	■	■	□	□	■	■	44	■	■	□	□	■	□
13	□	■	□	□	■	■	45	□	■	□	□	■	□
14	■	□	□	□	■	■	46	■	□	□	□	■	□
15	□	□	□	□	■	■	47	□	□	□	□	■	□
16	■	■	■	■	□	■	48	■	■	■	■	□	□
17	□	■	■	■	□	■	49	□	■	■	■	□	□
18	■	□	■	■	□	■	50	■	□	■	■	□	□
19	□	□	■	■	□	■	51	□	□	■	■	□	□
20	■	■	□	■	□	■	52	■	■	□	■	□	□
21	□	■	□	■	□	■	53	□	■	□	■	□	□
22	■	□	□	■	□	■	54	■	□	□	■	□	□
23	□	□	□	■	□	■	55	□	□	□	■	□	□
24	■	■	■	□	□	■	56	■	■	■	□	□	□
25	□	■	■	□	□	■	57	□	■	■	□	□	□
26	■	□	■	□	□	■	58	■	□	■	□	□	□
27	□	□	■	□	□	■	59	□	□	■	□	□	□
28	■	■	□	□	□	■	60	■	■	□	□	□	□
29	□	■	□	□	□	■	61	□	■	□	□	□	□
30	■	□	□	□	□	■	62	■	□	□	□	□	□
31	□	□	□	□	□	■	63	□	□	□	□	□	□
Address	1	2	3	4	5	6	Address	1	2	3	4	5	6
	Switch Setting							Switch Setting					

■ switch towards number
□ switch away from number

Addresses and Switch Settings

4. **Attach the tap cable to the OmniDrive.**

Plug the three-slot connector at the end of the tap cable into the three-pronged connector marked *TAP*, next to the switches, on the back of the OmniDrive.

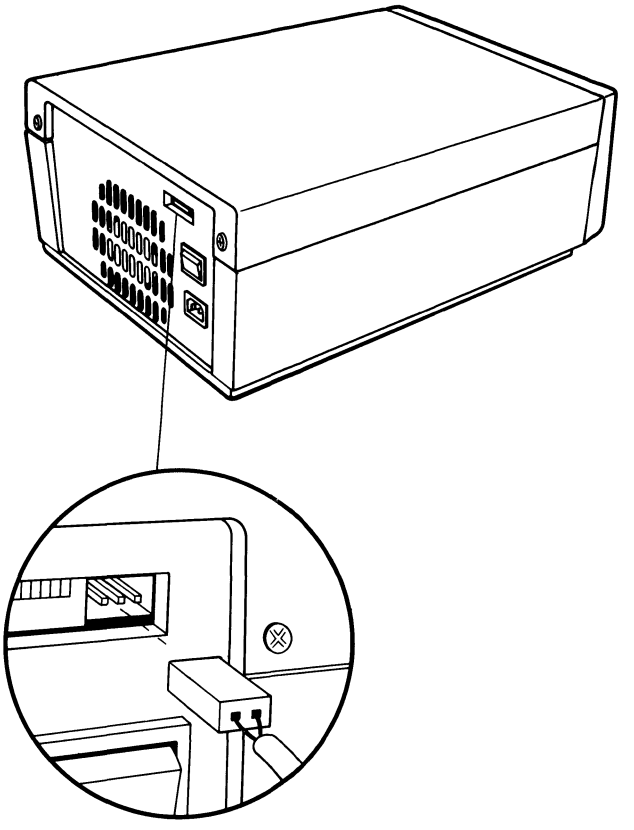

Attaching the Tap Cable to the OmniDrive

5. Connect the tap cable and the convenience connector.

The convenience connector was supplied with the OmniDrive. Plug the jack at the other end of the tap cable into one end of the convenience connector.

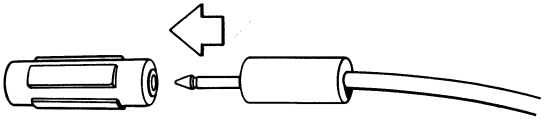

Attaching the Tap Cable and the Convenience Connector

6. **Plug the power cord into the OmniDrive.**

7. **Plug the power cord into a power outlet.**

   Go to the next step to do an OmniDrive check.

8. **Turn on the OmniDrive.**

   The OmniDrive power switch is on the back panel above the power cord connector.

   When the OmniDrive is turned on, the three lights on the front panel light up. After about twenty seconds, only the READY light will stay lit. This means that the drive is ready for use.

   If, after one minute, the READY light is not on all by itself, reset the OmniDrive by turning it off, then back on. If the READY light still does not come on all by itself, refer to the *Network Diagnostics Guide for the IBM PC* to troubleshoot any problems.

9. **Turn off the the OmniDrive.**

   Continue with the steps in the next section to complete connecting the OmniDrive to the IBM PC.

Installing the Transporter Card

This section shows how to install the Corvus Transporter card in the IBM Personal Computer and how to connect a tap cable from the card to the OmniDrive. Once the OmniDrive and IBM PC tap cable are connected, the system generation process can begin.

1. **Make sure the computer is turned off.**

2. **Set the device address for the computer.**

   Hold the Transporter card with the component side up. Near the center of the card is a switch unit where you will set the address for your IBM PC.

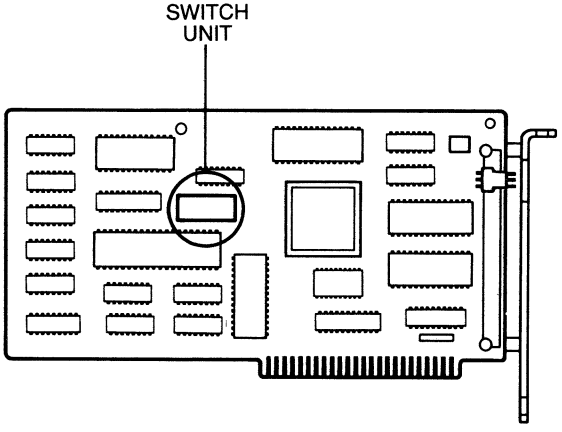

Transporter Card and Switch Unit

Choose an address from 1 to 63 for the computer. *The address selected must be different from the addresses of all other devices on the network.* Set the address on the switches.

The table on page 20 shows the switch settings for each address. Switches 7 and 8 do not affect the address. Set **switches 7 and 8 towards the number.**

Write the address in the Omninet Device Table in Appendix B for future reference.

3. **Unplug the power cord from the computer.**

4. **Remove the cover from the IBM PC.**

Unscrew the two screws on the rear panel which hold the cover on the computer. Pull the cover of the computer forward.

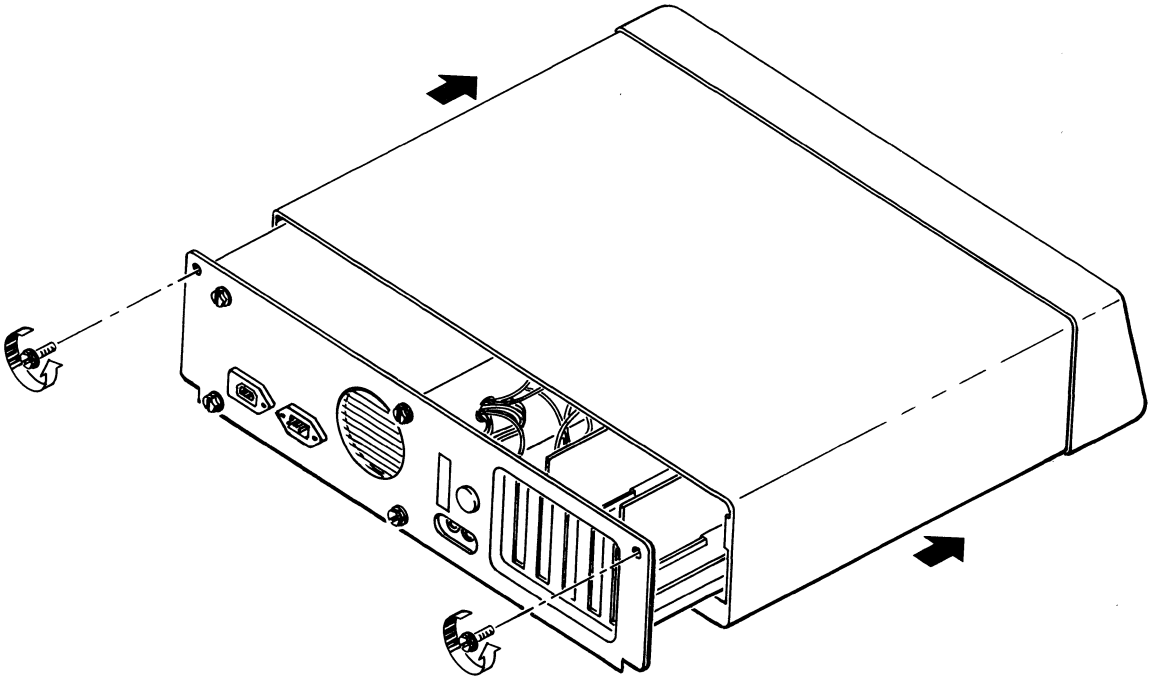

Removing the Cover from the IBM PC

5. Open an access port in the back of the computer.

On the back of the computer are a number of access plates next to five slots in the computer's circuit board. Find an unused slot and unscrew the top screw from the metal plate which is closest to the slot. Remove the plate by sliding it upward.

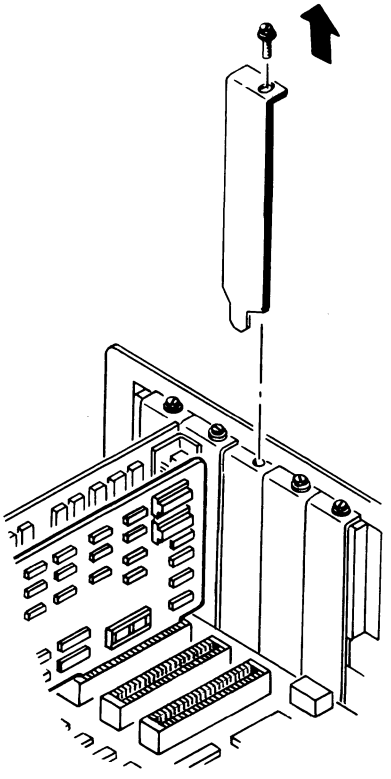

Opening an Access Port

6. **Pass the tap cable through the access port.**

7. **Connect the tap cable to the Transporter card.**

   Plug the three-slot connector end of the tap cable into the three-prong connector on the Transporter card. The drawing displays how to connect the tap cable to the connector on the Transporter card. You must use the tap cable supplied by Corvus.

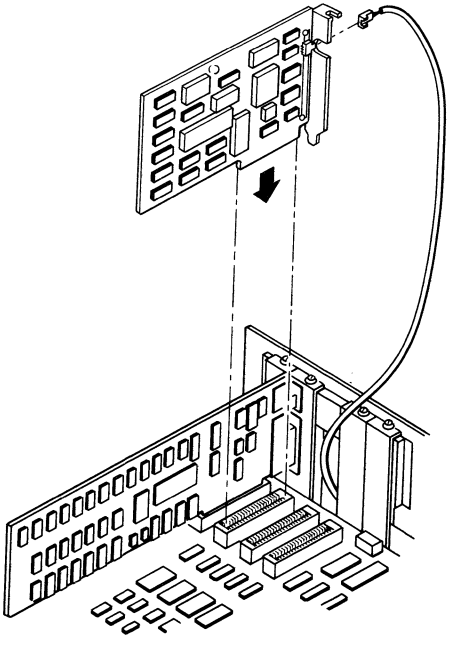

Installing the Transporter Card into the Computer

8. **Put the Transporter card into an empty slot in the computer.**

   The drawing on the previous page illustrates how to install the card. Insert the Transporter card into the slot from which the access plate was removed. Align the metal plate attached to the Transporter card with the corresponding access port. Use the screw from the old access plate to hold the new plate in place.

9. **Put the cover back on the computer.**

10. **Plug the power cord back into the computer.**

Attaching the Tap Cable and the Convenience Connector

1. **Attach the tap cable to the convenience connector.**

   A tap cable and a convenience connector should already be connected to the OmniDrive. Take the free end of the tap cable connected to the IBM PC and plug it into the convenience connector.

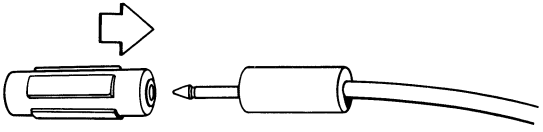

Connecting Tap Cable to Convenience Connector

2. **Turn on the OmniDrive.**

   The OmniDrive power switch is on the back panel above the power cord connector.

   Once the drive is turned on, the three lights on the front panel light up. After about twenty seconds, only the READY light should remain on, indicating the drive is ready for use.

   If, after one minute, the READY light is not the only light on, reset the OmniDrive by turning it off, then back on. If the READY light still does not come on correctly, refer to the *Network Diagnostics Guide for the IBM PC.*

What's Next?

Now that you have set up your OmniDrive, go to the chapter that is indicated on the flowchart in the Introduction to Part One—the one that applies to your network setup.

PART ONE
Chapter 2

Starting an IBM PC Network

Contents

35 **Introduction**

36 **Preparing for Constellation II**
36 Copying Diskettes
38 Updating the Firmware

45 **Initializing the OmniDrive**
46 System Generation Program
59 Making the Corvus Boot Diskette
63 Copying Constellation II Utilities

67 **What's Next?**

Introduction

This chapter is aimed at the network manager who is setting up a Constellation II network of one or more IBM PCs for the first time.

To set up a network with one IBM PC, you will need an IBM PC, one OmniDrive, and Constellation II software diskettes.

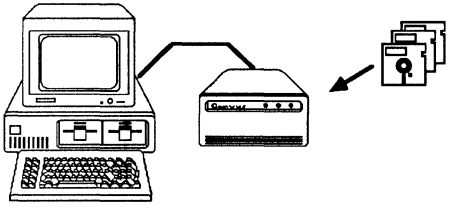

To set up a multiple IBM network system you will need two or more IBM PCs, one Omnidrive and Constellation II software.

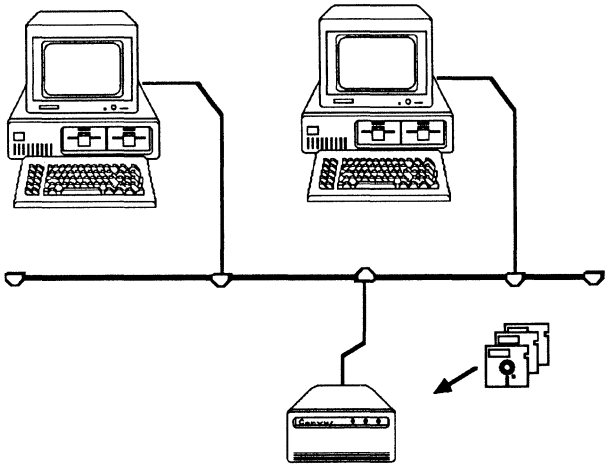

Preparing for Constellation II

Two preliminary steps should be taken before an OmniDrive can go through system generation, or initialization, for use with the IBM Personal Computer. First, make copies of the distribution diskettes. The copies of the diskettes should be used for the system generation process, and the originals should be stored in a safe place. Second, copy a firmware file to the OmniDrive.

COPYING DISKETTES

1. **Put the IBM MS-DOS system diskette into the diskette drive.**

   Insert the IBM MS-DOS system diskette into drive A.

2. **Turn on the computer.**

   The screen prompts you to enter the date and time. **Type** the date and time. The screen displays the operating system prompt.

3. **Copy the Corvus diskettes.**

   Make copies of all the Corvus diskettes. *Use only double-sided diskettes.* Use the MS-DOS DISKCOPY program to copy all three diskettes. The *IBM Disk Operating System* guide explains how to use DISKCOPY.

   Use the copies to generate your system. Store the originals in a safe place. If any problems arise, the source diskettes will be available.

UPDATING THE FIRMWARE

Before the IBM Personal Computer can communicate with the OmniDrive, a firmware file must be copied from diskette to the drive. The firmware acts as an interpreter for drive commands between the computer and the OmniDrive.

Copying firmware onto the drive is known as updating the firmware. Use the mass storage diagnostic program, found on the CORMS32 diskette, to update the firmware.

1. **Turn on the Omnidrive.**

   Wait until only the READY light is lit before performing the next step.

2. **Put the CORMS32 diskette in the diskette drive.**

   Insert the CORMS32 diskette in drive A.

3. **Reboot the computer.**

   Hold down [CTRL] and [ALT] and

   Press [DEL]

After a minute, the screen displays:

```
Corvus Management Utility                Server:
Version [x.x]                            Drive:

(c) Copyright 1982...1985 Corvus Systems, Inc.

-----------------------------------------------

D - Mass Storage Diagnostic

T - Transfer Manager

O - Omninet Test

L - List Drives

-----------------------------------------------

Please select an option:
```

Press D

The screen displays:

```
MDIAG [x.xx]: Corvus Mass Storage Diagnostic
Select Drive                        Slt:1 Srv:0
-----------------------------------------

Active network nodes: ("*" indicate this node)

0.......................

-----------------------------------------

Select server number [0..63]:0
```

4. Select the server number.

Enter the Omninet address of the OmniDrive. The address of 0 was determined in Chapter 1.

To accept the default address of 0,

Press [RETURN]

The screen displays:

```
MDIAG [x.xx]:  Corvus Mass  Storage  Diagnostic (c)
Copyright 1985 Corvus Systems, Inc.  Slt:  1 Srvr:  1

      -------------------------------

 D -  Select Drive
 V -  Version Check
 P -  Park Heads for Shipment
 X -  Exercise Drive
 C -  Check for Bad Tracks
 S -  Show Results


 F -  Format Drive
 U -  Update Firmware
 M -  Modify Parameters


 N -  Set Diag Data File Name
 A -  Advanced Options


 E -  Exit

      -------------------------------

 Select diagnostic option:
```

5. Select update firmware.

Press U

The screen displays:

```
The selected option may destroy data on the  drive.  Ensure
the correct device is selected.

FORMAT and UPDATE options require  the  firmware file to
be on a controller other than the selected device.

Selected device is slot 1, server 0, drive 1.

Continue?  [Y/N]:N
```

The firmware file is on the CORMS32 diskette.

Press Y

The screen display is similar to:

```
Firmware file message:  ODRV1.7--CONST II -9/84

Continue?[Y/N]:Y
```

Press [RETURN]

The screen display is similar to:

```
Enter firmware file name:  ODRV.FIRMWARE
```

6. **Enter the firmware file name.**

   The firmware code is contained in the ODRV.FIRMWARE file. This file is included on the CORMS32 diskette. Accept the suggested file name.

   Press [RETURN]

   The screen displays:

```
Change drive tables? [Y/N]:N
```

   Press [RETURN]

The screen displays:

```
Moving firmware from ODRV.FIRMWARE to drive

..................

Drive firmware updated.

Reset device--Turn drive power off then on again.

Press [SPACE] to continue.
```

7. Remove the CORMS32 diskette and reset the OmniDrive.

Remove CORMS32. Turn off the OmniDrive, wait ten seconds, then turn it back on. Wait until only the READY light is lit before continuing with the system generation process.

8. Return to the diagnostic program main menu.

Press [SPACE]

9. Exit the diagnostic program.

Press E

Initializing the OmniDrive

During system generation, or the process of initializing an OmniDrive with the Constellation II software, names, passwords, volumes and files are created. Naming the volumes, drives, and files keeps important information in recognizable areas. Passwords keep the information in the volumes and files secure.

For example, the drive password is the key to protecting the information on the drive from unauthorized changes. If only you know the password, only you can change the information.

To initialize the OmniDrive with Constellation II software, you will need to boot your IBM PC with the CORMS31 diskette.

The system generation program creates a CORVUS volume and the IBMMS, IBMSYS, IBMBOOT, and IBMBACK volumes. The system generation program also creates tables within the CORVUS volume. These tables include user, volume, and access tables. The system generation program creates users including IBMGR, IBMUSER, IBMBACKUP, and TEMP.

Users IBMGR and IBMUSER are generally reserved for the network manager. Part Two explains these volumes and users in detail.

SYSTEM GENERATION PROGRAM

Please follow the steps below to run the system generation program.

1. **Put the CORMS31 diskette in the computer.**

   Insert the CORMS31 diskette in drive A.

2. **Reboot the computer.**

   Hold down [CTRL] and [ALT] and

   Press [DEL]

   After a minute the screen displays:

```
Corvus Management Utilities        Server:
Version [x.xx]                     Drive:
(c) Copyright 1982..1985  Corvus Systems, Inc.

-------------------------------------------

I - Initialize Drive

M - Mirror

L - List Drives

-------------------------------------------
```

Press I

After a minute the screen displays:

```
-----------------------------------------
        Enter SYSGEN Password:
```

3. **Enter the password.**

   Type HAI

   Press [RETURN]

   The password does not appear on the screen.

The screen displays the main menu of the system generation program:

```
System Generation [x.xx]: MSDOS
Main Menu
(c) Copyright 1982...1985 Corvus Systems, Inc.
-------------------------------------
I - Initialize a New Drive
M - Modify an Existing Drive
D - Display Drives On-line

H - Help
-------------------------------------

Please select an option:
```

4. Select the option to initialize a new drive.

Type I

The screen displays:

```
----------------------------------------
Please select drive to be initialized.

     Server number: 0
```

5. Select the server address.

Enter the Omninet address of the OmniDrive. The address was determined in Chapter 1 under "Setting Up the OmniDrive" where you set it to 0.

To accept the default address of 0,

Press [RETURN]

The screen displays:

```
Drive number:  1
```

6. **Select the drive.**

An OmniDrive is always drive 1. To accept the suggested drive number,

Press [RETURN]

The screen displays:

```
Selected drive is server 0, drive 1.

Enter disk server name: SERVER00
```

7. **Name the OmniDrive server.**

The OmniDrive network disk system has a built-in disk server that is identified by name. Constellation II uses the server name to recognize drives on the network. Every mass storage system must have a server name.

Accept the suggested server name of SERVER00 and record the name in the Omninet Device Table in Appendix B for future reference.

To accept the suggested server name,

Press [RETURN]

The screen displays:

```
Enter disk server password: SERVER00
```

8. Assign the server password.

The suggested server password is also formed from the server address—SERVER00. Write the password in the Omninet Device Table in Appendix B for future reference.

To accept the suggested password,

Press [RETURN]

The screen displays:

```
Enter drive name: DRIVE1
```

9. **Name the drive.**

The OmniDrive has only one disk associated with its server, but other disk servers can have more than one disk attached. Constellation II uses the drive name to recognize individual disks connected to each server on the network. Every disk must have a drive name.

The suggested drive name is DRIVE1. Write the name in the Omninet Device Table in Appendix B for future reference.

To accept the suggested drive name,

Press [RETURN]

The screen displays:

```
Enter drive password: DRIVE1
```

10. Assign the drive password.

The drive password is the key to protecting the information on the drive from unauthorized changes. If only you know the password, only you can change the information.

The suggested drive password is DRIVE1. Write the password in the Omninet Device Table in Appendix B for future reference.

To accept the suggested drive password,

Press [RETURN]

The screen display is similar to:

```
Selected drive is server 0, drive 1
Total drive capacity is 21600 blocks.

Do you want to use the
standard configuration? (Y/N)?Y
```

11. Choose the desired configuration.

The configuration sets the size and attributes of the CORVUS volume. If you are setting up a single-computer system or the first drive for an IBM network, the standard configuration is fine.

Press [RETURN]

12. Initialize the new drive.

The screen display should be similar to:

```
Blocks 9 through 3156 will be overwritten.

OK to initialize the new drive? (Y/N)N
```

Type Y

Press [RETURN]

The screen display is similar to:

```
Selected drive is server 0, drive 1

Initializing CORVUS volume...

[   0] ....................................
[  40] ....................................
[  80] ....................................
[ 120] ....................................
[ 160] ....................................

196 system table blocks initialized.

-------------------------------------------
```

The screen then displays:

```
Selected drive is server 0, drive 1.
Opening file BOOT.IBMPC
Mounting volume CORVUS from server SERVER0 at address 0 on unit 12
Copying file ...........
Boot table updated.
Adding users to server SERVER0 at address 0
.....
IBMSYS volume initialized.
IBMBOOT volume initialized.
IBMBACK volume initialized.
IBMMS volume initialized.
.................

-------------------------------------
```

The remainder of the system generation process involves copying Constellation II software from two diskettes to the volumes just initialized. After the first diskette, CORMS31, is copied, the screen requests CORMS32. **Insert the diskette and press** [RETURN]. After both diskettes are copied, the screen displays:

```
Selected drive is server 0, drive 1.

Update completed.
Please Reboot.
```

13. Reset the OmniDrive and reboot the computer.

Turn off the OmniDrive, wait 10 seconds, then turn it back on. Wait until only the READY light is lit before rebooting the computer. **Insert the MS-DOS system diskette in drive A,** then hold down [CTRL] and [ALT] and

Press [DEL]

The screen prompts you for the date and time. Type the date and time. The screen will display the operating system prompt.

The OmniDrive network disk system is now initialized. Go to the next section to continue setting up your IBM PC network system.

MAKING THE CORVUS BOOT DISKETTE

In this section you will make the Corvus Boot Diskette and in the following section you will log on with the new diskette and copy the Constellation II MS-DOS utility programs to IBMMS, the MS-DOS volume created during system generation.

Once user names and accounts have been created by the network manager, all users will be able to activate their own volumes directly from the MS-DOS operating system.

Corvus provides a program called MAKEDISK to make boot diskettes. You should have a blank diskette that can be made into the boot diskette, or you can use the fixed disk in an IBM XT or AT as its boot disk. Each user must have either a copy of the boot diskette or the files on his fixed disk.

The diskette must not be write-protected. However, to be made into a Corvus Boot Disk, a fixed disk must have the MS-DOS system files already on it.

Follow the steps below to format a diskette and use MAKEDISK to make the Corvus Boot Diskette. *Skip step 1 if you are setting up a fixed disk as the Corvus Boot disk.* The screen should be displaying the prompt for drive A or the fixed disk, with the system diskette in drive A or the system files on the fixed disk.

1. **Format a diskette using the /S option.**

   Type FORMAT B: /S

   Press [RETURN]

The FORMAT program prompts you to insert the blank diskette in drive B. **Insert a blank diskette or an old version of a boot diskette and press** [RETURN]. After the diskette is formatted, remove it from the drive and return to the system prompt.

2. **Insert the CORMS33 diskette in drive A.**

3. **Run the MAKEDISK program.**

   The MAKEDISK program transfers the Corvus files needed to make a boot diskette. MAKEDISK can also copy the files to the fixed disk on an IBM XT or AT. You must specify which drive you want to receive the files. For example, to make a boot diskette with a diskette in drive B,

   Type MAKEDISK B:

   Press [RETURN]

   To make a fixed disk on drive C into the Corvus Boot disk and eliminate the need for a boot diskette,

   Type MAKEDISK C:

   Press [RETURN]

The screen displays:

```
Insert diskette for drive A:

and strike any key when ready
```

The CORMS33 diskette is already in drive A — do not remove the diskette.

Press [SPACE]

The screen display is similar to:

```
Place formatted disk in drive B:
Strike any key when ready . . .
```

If you specified a fixed disk or drive B on an IBM with two diskette drives, press any key and the program will begin copying files.

If you have only one diskette drive, the procedure varies a bit. After you insert the formatted disk in the drive and press a key, the screen displays:

```
Insert disk with batch file
and press any key when ready
```

Return the CORMS33 diskette to the diskette drive and

Press any key.

Now the COPY program prompts you for the diskettes for drives A and B as needed.

MAKEDISK copies the files CORDRV.BIN, NETPRINT.BIN, CONFIG.SYS, PBOOT.DAT, and CNP.COM onto the formatted diskette or the fixed disk. After the files are copied, remove CORMS33 and place it with the other Corvus diskettes.

Remove the new boot diskette and label it *Corvus Boot Diskette.* Make sure to write-protect the Corvus Boot Diskette. Use the MS-DOS DISKCOPY command to make a copy of the Corvus Boot Diskette for each user on the network.

COPYING CONSTELLATION II UTILITIES

The steps below show how to put Corvus utilities in the volume IBMMS which was created during system generation. All IBM network users can share programs and other files in IBMMS after their user accounts are established. As network manager, you will ensure that IBMMS will be write-protected for all users except one, IBMUSER, a user account created during system generation. IBMUSER is a name generally reserved for the network manager. Log on as IBMUSER to copy files into IBMMS.

Corvus creates IBMMS to hold Corvus utilities (including SPOOL.EXE, DESPOOL.EXE, and MNTMGR2.EXE) and other programs that all users can share and can access directly from the MS-DOS operating system. These programs will be discussed in in the *Network User's Guide for the IBM PC.*

1. **Reboot the computer.**

   Insert the Corvus Boot Diskette made in the previous section into drive A, or just reboot an XT or AT whose fixed disk has the Corvus boot files.

   Hold down [CTRL] and [ALT] and

   Press [DEL]

The screen displays the Constellation II log-on message, similar to:

```
                *
               * *
            C O R V U S   S Y S T E M S

                  CONSTELLATION II


Please enter your name:


Version: x.xx       Boot Server: NN      Station: xx
```

2. **Log on as IBMUSER.**

   Type IBMUSER

   Press [RETURN]

The screen display is similar to:

```
Mounting volume IBMMS from server SERVER0 on UNIT C.

Corvus-IBM driver CORDRV [x.xx] installed.

Installing Corvus Printer Driver NETPRINT [x.xx] for the IBM PC.
USING PRINTER "PRINTER" and Disk Server SERVER00."
NETPRINT installed.
```

After you enter the date and time, the screen displays the operating system prompt. Note the mount unit for the volume IBMMS at the top right of the screen.

3. **Copy the Corvus utilities to the IBMMS volume.**

   DO NOT use the DISKCOPY, SYS, or FORMAT programs with a Corvus volume as the result is unpredictable and data could be destroyed. To copy files when Corvus volumes are involved *always* use the COPY command.

   Insert the CORMS33 diskette in drive A.

   Copy all the files from CORMS33 to IBMMS. For example, if IBMMS is mounted on unit C,

   Type COPY A:*.* C:

   Press [RETURN]

The programs just copied, including SPOOL.EXE, DESPOOL.EXE, and MNTMGR2.EXE, are explained in the *Network User's Guide for the IBM PC.*

The system generation process is complete.

What's Next?

Now that you have initialized your OmniDrive with Constellation II software, read the *Omninet Hardware Installation Guide* to install your network. Then go to Part Two in this guide to plan and manage your network.

PART ONE
Chapter 3

Adding An OmniDrive to a Network of IBM PCs

Contents

71 Introduction

72 Preparing for Constellation II
72 Copying Diskettes

73 Initializing the OmniDrive
74 System Generation Program
89 Making the Corvus Boot Diskette
93 Copying Constellation II Utilities

97 Updating the Firmware

104 Introduction to Merging Tables
104 Setting the Switches
105 Merging Tables

110 What's Next?

Introduction

If you have an existing network of IBM PCs and need to expand storage capacity, you will be adding a new OmniDrive by following steps in this chapter.

Since you are adding an OmniDrive to an existing network system, you will need to initialize your new OmniDrive with the Constellation II software. Then you must merge user tables so that both OmniDrives recognize users and their passwords as being valid. Once user tables are merged, users can boot and access all OmniDrives on the network.

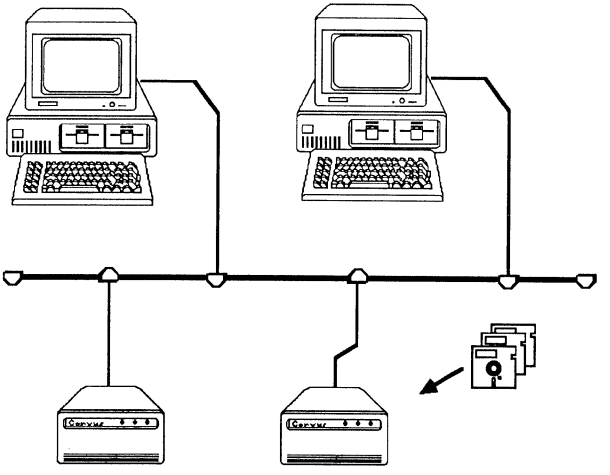

Preparing for Constellation II

A preliminary step should be taken before an OmniDrive can go through system generation, or initialization, for use with the IBM Personal Computer. Make copies of the distribution diskettes. The copies of the diskettes should be used for the system generation process, and the originals should be stored in a safe place.

COPYING DISKETTES

1. **Put the IBM system diskette into the diskette drive.**

   Insert the IBM MS-DOS system diskette into drive A.

2. **Turn on the computer.**

   The screen prompts you to enter the date and time. **Type** the date and time. The screen displays the operating system prompt.

3. **Copy the Corvus diskettes.**

   Make copies of all the Corvus diskettes. *Use only double-sided diskettes.* Use the MS-DOS DISKCOPY program to copy all four diskettes. The *IBM Disk Operating System* guide explains how to use DISKCOPY.

   Use the copies to generate your system. Store the originals in a safe place. If any problems arise, the source diskettes will be available.

Initializing the OmniDrive

During system generation, or the process of initializing an OmniDrive with Constellation II software, names, passwords, volumes and files are created. Naming the volumes, drives, and files keeps important information in recognizable areas. Passwords keep the information in the volumes and files secure.

For example, the drive password is the key to protecting the information on the drive from unauthorized changes. If only you know the password, only you can change the information.

To initialize the OmniDrive with Constellation II software, you will need to boot your IBM PC with the CORMS31 diskette.

SYSTEM GENERATION PROGRAM

Please follow the steps below to run the system generation program.

1. **Put the CORMS31 diskette in the computer.**

   Insert the CORMS31 diskette in drive A.

2. **Reboot the computer.**

   Hold down [CTRL] and [ALT] and

   Press [DEL]

After a minute the screen displays:

```
Corvus Management Utilities          Server:
Version [x.xx]                       Drive:
(c) Copyright 1982..1985  Corvus Systems, Inc.

-------------------------------------------


I - Initialize Drive

M - Mirror

L - List Drives


-------------------------------------------

Please select an option:
```

Press I

The screen displays:

```
Enter SYSGEN Password:
```

3. **Enter the password.**

   Type HAI

   Press [RETURN]

   The password does not appear on the screen.

The screen displays the main menu of the system generation program:

```
System Generation [x.xx]: MSDOS
Main Menu
(c) Copyright 1982...1985 Corvus Systems, Inc.
-------------------------------------
I - Initialize a New Drive
M - Modify an Existing Drive
D - Display Drives On-line

H - Help
-------------------------------------

Please select an option:
```

4. Select the option to initialize a new drive.

Type I

The screen displays:

```
Please select drive to be initialized.

      Server number: 1
```

5. Select the server address.

Enter the Omninet address of the OmniDrive. The address was determined in Chapter 1. Remember that each OmniDrive must have a unique address.

After entering the Omninet address,

Press [RETURN]

The screen displays:

```
Drive number: 1
```

6. Select the drive.

An OmniDrive is always drive 1. To accept the suggested drive number,

Press [RETURN]

The screen display is similar to:

```
System Generation [x.xx]: MSDOS
Initialize a New Drive

-----------------------------------------
Please select drive to be initialized.

     Server number: 1
     Drive number:  1

The drive you have selected is already initialized.
You are about to destroy all the data on it.


Continue? [Y/N]N
```

Type Y

Press [RETURN]

The screen displays:

```
Selected drive is server 1, drive 1.

Enter disk server name: SERVER01
```

7. **Name the OmniDrive server.**

The OmniDrive network disk system has a built-in disk server that is identified by name. Constellation II uses the server name to recognize drives on the network. Every mass storage system must have a server name.

The suggested name is formed from the server address, but a server may have any name up to ten characters in length.

Choose a name that begins with a letter, and write the name in the Omninet Device Table in Appendix B for future reference. Then **type** the name and **press** [RETURN]. For example,

Type DATA1

Press [RETURN]

The screen displays:

```
Enter disk server password: SERVER01
```

8. Assign the server password.

The suggested server password is also formed from the server address, but a server may have any password up to eight characters. Choose a password that begins with a letter, and write the password in the Omninet Device Table in Appendix B for future reference. Then **type** the password and **press** [RETURN]. For example,

Type SERVER01

Press [RETURN]

The screen displays:

```
Enter drive name: DRIVE1
```

9. **Name the drive.**

The OmniDrive has only one disk associated with its server, but other disk servers can have more than one disk attached. Constellation II uses the drive name to recognize individual disks connected to each server on the network. Every disk must have a drive name.

The suggested drive name is DRIVE1, but a drive may have any name up to 10 characters. Choose a name that begins with a letter, and write the name in the Omninet Device Table in Appendix B for future reference. Then **type** the name and **press** [RETURN]. For example,

Type FIRST

Press [RETURN]

To accept the suggested drive name,

Press [RETURN]

The screen displays:

```
Enter drive password: DRIVE1
```

10. Assign the drive password.

The drive password is the key to protecting the information on the drive from unauthorized changes. If only you know the password, only you can change the information.

The suggested drive password is DRIVE1, but a drive may have any password up to eight characters. Choose a password of up to eight characters, either letters or numbers, with the first character a letter. Write the password in the Omninet Device Table in Appendix B for future reference. Then **type** the password and **press** [RETURN]. For example,

Type LOCK

Press [RETURN]

To accept the suggested drive password,

Press [RETURN]

The screen display is similar to:

```
Selected drive is server 1, drive 1
Total drive capacity is 21600 blocks.

Do you want to use the
standard configuration (Y/N)? Y
```

11. Choose the desired configuration.

The configuration sets the size and attributes of the CORVUS volume. Because you are setting up an additional OmniDrive for an existing Constellation II network, you will change the configuration.

Type N

Press [RETURN]

The screen displays:

```
Do you want to change the location
of the system volumes(Y/N)?  N
```

Press [RETURN]

The screen displays:

```
Do you want to create only
the CORVUS volume(Y/N)?  N
```

Creating only the Corvus volume initializes a drive without transferring the Constellation II software to it. Select this option because the drive will be added to a network of IBM computers that aready has Constellation II software on another OmniDrive.

Press Y

Press [RETURN]

The screen displays:

```
Do you want to change the size
of the CORVUS volume(Y/N)?  N
```

Press [RETURN]

The screen displays:

```
Blocks 9 through 309 will be overwritten.

OK to initialize the additional drive(Y/N)?N
```

12. Initialize the additional drive.

Type Y

Press [RETURN]

The screen display is similar to:

```
Selected drive is server 1, drive 1.

Initializing CORVUS volume...

[   0] ....................................
[  40] ....................................
[  80] ....................................
[ 120] ....................................
[ 160] ....................................

196 system table blocks initialized.

-----------------------------------------------
```

Then the screen display is similar to:

```
Opening file BOOT.IBMPC
Mounting volume CORVUS from server SERVER1 at address 1 on unit 12
Copying file ..........
Boot table updated.

Adding users to server00 at address00

Additional drive initialized

-----------------------------------------------

Press <space> to continue
```

Press [SPACE]

The screen displays the system generation main menu. Now reset the OmniDrive. Turn off the drive, then turn it back on. Wait until only the READY light is lit, then **insert the IBM MS-DOS system diskette in drive A** and reboot the computer.

After inserting the diskette, hold down [CTRL] and [ALT] and

Press [DEL]

The screen prompts for the date and time. **Type** the date and time. The screen displays the operating system prompt. You are finished with the first part of system generation for the additional drive.

Please go to the next section, "Making the Corvus Boot Diskette," to upgrade to the new MS-DOS utilities on users' boot diskettes. These new utilities are explained in the *Network User's Guide for the IBM PC.*

MAKING THE CORVUS BOOT DISKETTE

In this section you will make the Corvus Boot Diskette and in the following section you will log on with the new diskette and copy the Constellation II MS-DOS utility programs to IBMMS, the MS-DOS volume created during system generation.

Once user names and accounts have been created by the network manager, all users will be able to activate their own volumes directly from the MS-DOS operating system.

Corvus provides a program called MAKEDISK to make boot diskettes. You should have a blank diskette that can be made into the boot diskette, or you can use the fixed disk in an IBM XT or AT as its boot disk. If you are setting up an Omninet network for IBM PCs, each user must have either a copy of the boot diskette or the files on his fixed disk.

The diskette must not be write-protected. However, to be made into a Corvus Boot Disk, a fixed disk must have the MS-DOS system files on it.

Follow the steps below to format a diskette and use MAKEDISK to make the Corvus Boot Diskette. *Skip step 1 if you are setting up a fixed disk as the boot disk.* The screen should be displaying the prompt for drive A or the fixed disk, with the system diskette in drive A or the system files on the fixed disk.

1. **Format a diskette using the /S option.**

   Type FORMAT B: /S

   Press [RETURN]

   The FORMAT program prompts you to inserting the blank diskette in drive B. **Insert a blank diskette or an old version of a boot diskette and press** [RETURN]. After the diskette is formatted, remove it from the drive and return to the system prompt.

2. **Insert the CORMS33 diskette in drive A.**

3. **Run the MAKEDISK program.**

   The MAKEDISK program transfers the Corvus files needed to make a boot diskette. MAKEDISK can also copy the files to the fixed disk on an IBM XT or AT. You must specify which drive you want to receive the files. For example, to make a boot diskette with a diskette in drive B,

   Type MAKEDISK B:

   Press [RETURN]

   To make a fixed disk on drive C the Corvus boot disk and eliminate the need for a boot diskette,

   Type MAKEDISK C:

   Press [RETURN]

The screen displays:

```
Insert diskette for drive A:

and strike any key when ready
```

The CORMS33 diskette is already in drive A—do not remove the diskette.

Press [SPACE]

The screen display is similar to:

```
Place formatted disk in drive B:
Strike any key when ready . . .
```

If you specified a fixed disk or drive B on an IBM with two diskette drives, press any key and the program will begin copying files.

If you have only one diskette drive, the procedure varies a bit. After you insert the formatted disk in the drive and press a key, the screen displays:

```
Insert disk with batch file
and press any key when ready
```

Return the CORMS33 diskette to the diskette drive and press any key.

Now the COPY program prompts you for the diskettes for drives A and B as needed.

MAKEDISK copies the files CORDRV.BIN, NETPRINT.BIN, CONFIG.SYS, PBOOT.DAT, and CNP.COM onto the formatted diskette or the fixed disk. After the files are copied, remove CORMS33 and place it with the other Corvus diskettes.

Remove the new boot diskette and label it *Corvus Boot Diskette.* Use the DISKCOPY program to make a copy of this diskette for each network user. Make sure to write-protect the Corvus Boot Diskette.

COPYING CONSTELLATION II UTILITIES

The steps below show how to put Corvus utilities in the volume IBMMS, which was created during system generation. All IBM network users can share programs and other files in IBMMS after their user accounts are established. As network manager, you will ensure that IBMMS will be write-protected for all users except one, IBMUSER, a user account created during system generation. IBMUSER is a name generally reserved for the network manager. Log on as IBMUSER to copy files into IBMMS.

Corvus creates IBMMS to hold Corvus utilities (including SPOOL.EXE, DESPOOL.EXE, and MNTMGR2.EXE) and other programs that all users can share and can access directly from the MS-DOS operating system. These programs will be discussed in the *Network User's Guide for the IBM PC.*

1. **Reboot the computer.**

   Insert the Corvus Boot Diskette made in the previous section into drive A, or just reboot an XT or AT whose fixed disk has the Corvus boot files.

   Hold down [CTRL] and [ALT] and

   Press [DEL]

The screen displays the Constellation II log-on message, similar to:

```
                    *
                  * *
                C O R V U S   S Y S T E M S

                     CONSTELLATION II


    Please enter your name:


      Version: x.xx       Boot Server: NN      Station: xx
```

2. Log on as IBMUSER.

Type IBMUSER

Press [RETURN]

The screen display is similar to:

```
Mounting volume IBMMS from server SERVER00 on UNIT  C:

Corvus-IBM driver CORDRV [x.xx] installed.

Installing Corvus Printer Driver NETPRINT [x.xx] for the IBM PC.
Using Printer "PRINTER" and Disk Server "SERVER01."
NETPRINT installed.
```

After you enter the date and time, the screen displays the operating system prompt. Note the mount unit for the volume IBMMS in the upper right-hand corner of the screen.

3. **Copy the Corvus utilities to the IBMMS volume.**

   DO NOT use the DISKCOPY, SYS, or FORMAT programs with a Corvus volume as the result is unpredictable and data could be destroyed. To copy files when Corvus volumes are involved *always* use the COPY command.

   Insert the CORMS33 diskette in drive A.

   Copy all the files from CORMS33 to IBMMS. For example, if IBMMS is mounted on unit C,

   Type COPY A:*.* C:

   Press [RETURN]

Connect all OmniDrives to your network. If you need help installing your new OmniDrive on your network, refer to the *Omninet Hardware Installation Guide.*

Go to the next section to update the firmware on all OmniDrives.

Updating the Firmware

Before the IBM Personal Computer can communicate with the OmniDrive, a firmware file must be copied from diskette to the drive. The firmware acts as an interpreter for drive commands between the computer and the OmniDrive.

Copying firmware onto the drive is known as updating the firmware. Use the mass storage diagnostic program, found on the CORMS32 diskette, to update the firmware.

Follow the steps below for each OmniDrive on your network. For the first OmniDrive, begin at step one. For the rest of the OmniDrives, begin at step three.

1. **Put the CORMS32 diskette in the diskette drive.**

   Insert the CORMS32 diskette in drive A.

2. **Reboot the computer.**

   Hold down [CTRL] and [ALT] and

   Press [DEL]

After a minute, the screen displays:

```
Corvus Management Utility                Server:
Version [x.x]                            Drive:

(c) Copyright 1982...1985 Corvus Systems, Inc.

-----------------------------------------------

D - Mass Storage Diagnostic

T - Transfer Manager

O - Omninet Test

L - List Drives

-----------------------------------------------

Please select an option:
```

Press D

The screen displays:

```
MDIAG [x.xx]: Corvus Mass Storage Diagnostic
Select Drive                        Slt:1 Srv:0
-----------------------------------------


Active network nodes: ("*" indicate this node)

0.......................

-----------------------------------------

Select server number [0..63]:0
```

3. Select the server number.

Enter the Omninet address of the OmniDrive. The address was determined in Chapter 1. For example, if the Omninet address is 1,

Press 1

Press [RETURN]

The screen displays:

```
MDIAG  [x.xx]:   Corvus  Mass   Storage   Diagnostic  (c)
Copyright 1985 Corvus Systems, Inc.  Slt:  1 Srvr:  1

      --------------------------------

 D -  Select Drive
 V -  Version Check
 P -  Park Heads for Shipment
 X -  Exercise Drive
 C -  Check for Bad Tracks
 S -  Show Results


 F -  Format Drive
 U -  Update Firmware
 M -  Modify Parameters


 N -  Set Diag Data File Name
 A -  Advanced Options


 E -  Exit

      --------------------------------
```

4. **Select update firmware.**

Press U

The screen displays:

```
Select diagnostic option:
The selected option may destroy data on the  drive.
Ensure the correct device is selected.

FORMAT and UPDATE options require  the  firmware file to
be on a controller other than the selected device.

Selected device is slot 1, server1, drive 1.

Continue?  [Y/N]:N
```

The firmware file is on the CORMS32 diskette.

Press Y

The screen display is similar to:

```
Change drive tables?  [Y/N]:N
```

Press [RETURN]

The screen display is similar to:

```
Enter firmware file name:  ODRV.FIRMWARE
```

5. **Enter the firmware file name.**

   The firmware code is contained in the ODRV.FIRMWARE file. This file is included on the CORMS32 diskette. Accept the suggested file name.

   Press [RETURN]

   The screen displays:

```
Firmware file message:  ODRV1.7--CONST II -9/84

Continue? [Y/N]:Y
```

   Press [RETURN]

The screen displays:

```
Moving firmware from ODRV.FIRMWARE to drive
.....

Drive firmware updated.

Reset device--Turn drive power off then on again.

Press [space] to continue.
```

6. Return to the diagnostic program main menu.

Press [SPACE]

7. Exit the diagnostic program.

Press T

8. Remove the CORMS32 diskette and reset the OmniDrive.

Remove CORMS32. Turn off the OmniDrive, wait ten seconds, then turn it back on. Wait until only the READY light is lit before continuing with the system generation process.

Go to the next section to merge user tables.

Introduction to Merging Tables

This section explains how to update an existing Omninet local area network of IBM Personal Computers using Constellation II software to accept more than one OmniDrive. A disk server must have ROM version DSD9B or later. Contact a Corvus Authorized Service Center for further information.

Adding multiple servers (or OmniDrives) to a network with only IBM PCs requires checking the Omninet address, setting the bias switch and merging user tables.

You must merge user tables on all OmniDrives in order to insure that each user who boots on the network can reach any server (or OmniDrive), be recognized by that server, and be able to log on to the network system at any time.

SETTING THE SWITCHES

Before connecting the new server to the network, make sure all servers have unique addresses and their bias switches are set properly. The first server on the network must have the bias on, and all other servers must have the bias off. Refer to Chapter 1 to make sure that you set the addresses and set the bias properly.

MERGING TABLES

Merging user tables requires complete control of the network. Make sure that no one is trying to use the network when following the steps below.

If you have a Bank, it is automatically excluded from the merge operation. To update the Bank user table, you must enter the User Management menu to add or delete users.

Connect the OmniDrive you have just initialized and the IBM PC to the Omninet network. The new OmniDrive needs to be on the network in order to merge users tables on all OmniDrives.

Make sure the existing servers are turned on and the new server is left turned off until instructed to turn it on.

1. **Turn on all servers, except for the new one.**

   After turning the servers on, wait until only the red indicator light labeled READY is lit before performing the next step.

2. **Boot the IBM PC with the Corvus Boot Diskette and log on as network manager.**

   Insert the Corvus Boot Diskette and turn on the computer. The network manager's user name is IBMGR and the password is HAI. After you log on, the screen will display the Constellation II main menu.

3. **Select the drive management option.**

   Press D

   The screen displays the drive management main menu.

4. **Turn on the new server.**

5. **List all servers on the network.**

   Press L

   The screen display is similar to:

```
CORVUS UTILITY [x.xx]       DS
List Drives               Drive
----------------------------------------
Updating Active User Table ...

Valid servers are: SERVER0, SERVER1

Press <space> to continue
```

   All servers on the network should be listed. If the servers are not listed, reset each drive and try the *list* option again. Once all servers are listed, press [SPACE] to return to the drive management menu, and go to the next step.

6. **Select an existing server.**

   Press S

The screen display is similar to:

```
CORVUS UTILITY [x.xx]       DS
Select Drive              Drive
----------------------------------------
Enter drive information:

Valid servers are: SERVER0, SERVER1
Enter server name: [SERVER0]
```

Type the server name, drive name and password for an existing server. Do not select the new server.

Press [RETURN]

The screen displays the drive management main menu again.

7. **Select the user manager.**

   Press U

   The screen displays the user manager main menu.

8. **Select the merge user tables option.**

   Press M

After a moment, the screen display is similar to:

```
User Manager [x.xx]                    Server: ORIGINAL
Merger User Tables                     Drive:  Drive1

-----------------------------------------------------

The user table from the current server ORIGINAL will be
merged onto the following server(s):

SERVER01

OK to continue?[Y/N]:Y
```

Press [RETURN]

The screen then displays:

```
Looking at server Server01

User IBMBACKUP aded
User IBMGR added
User IBMUSER added
User TEMP added
All server updated.
-----------------------------------

Press <space> to continue
```

The program automatically checks all the servers on the network and displays a similar list for each. Accept the suggested responses until all servers are updated.

Press [illegible]

The screen displays the user manager main menu. **Press** [illegible] to return to the drive management main menu.

Choose the select drive option. Select a drive and then enter the user management menu and use the *List users* option. Repeat these steps for each server to verify that all user tables are identical. Exit Constellation II completely.

The system generation process is complete.

What's Next?

Now that you have initialized your new OmniDrive and have merged user tables on all of your network OmniDrives, you are ready to go to Part Two to plan and manage your network.

PART ONE
Chapter 4

Adding an IBM PC to a Network of Other Computer Types

Contents

113 Introduction

114 Preparing for Constellation II
114 Copying Diskettes
115 Updating the Firmware
123 Finding a Free Area
124 Checking Names
124 Attaching the Tap Cable to the Convenience Connector

125 Adding to an Existing OmniDrive
125 Modifying the Existing OmniDrive
133 Making the Corvus Boot Diskette
137 Copying Constellation II Utilities

140 What's Next?

Introduction

If you want to add an IBM PC to an existing Constellation II network of other computer types and have space available on your original OmniDrive, you can add Constellation II for the IBM PC software to the existing OmniDrive. You will then have a compatible network system of computers with different operating systems.

Adding Constellation II for the IBM PC to an existing OmniDrive takes three steps.

First, make sure enough free space is available on the existing drive for the volumes created by this system generation. Second, check user and volume names on the drive to make sure none match those created by this system generation. Third, once all checks are made, add Constellation II for the IBM PC to the existing drive.

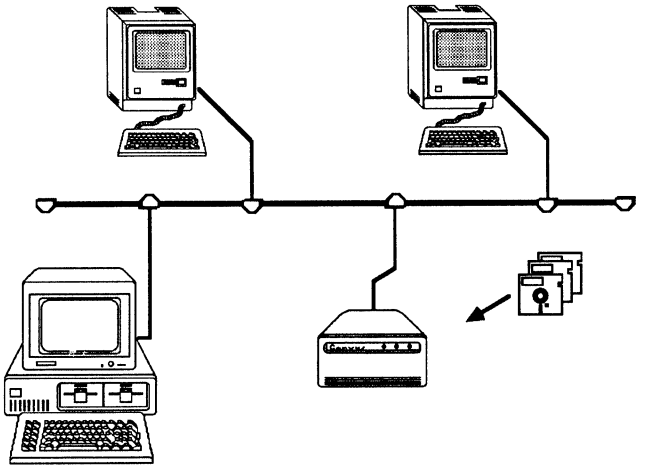

Preparing for Constellation II

Two preliminary steps should be taken before an OmniDrive can go through system generation, or initialization, for use with the IBM Personal Computer. First, make copies of the distribution diskettes. The copies of the diskettes should be used for the system generation process, and the originals should be stored in a safe place. Second, copy a firmware file to the OmniDrive.

COPYING DISKETTES

1. **Put the IBM MS-DOS system diskette into the diskette drive.**

   Insert the IBM MS-DOS system diskette into drive A.

2. **Turn on the computer.**

   The screen prompts you to enter the date and time. **Type** the date and time. The screen displays the operating system prompt.

3. **Copy the Corvus diskettes.**

   Make copies of all the Corvus diskettes. Use the MS-DOS DISKCOPY program to copy all four diskettes. *Use only double-sided diskettes.* The *IBM Disk Operating System* guide explains how to use DISKCOPY.

   Use the copies to generate your system. Store the originals in a safe place. If any problems arise, the source diskettes will be available.

UPDATING THE FIRMWARE

Before the IBM Personal Computer can communicate with the OmniDrive, a firmware file must be copied from diskette to the drive. The firmware acts as an interpreter for drive commands between the computer and the OmniDrive.

Copying firmware onto the drive is known as updating the firmware. Use the mass storage diagnostic program, found on the CORMS32 diskette, to update the firmware.

1. **Turn on the Omnidrive.**

   Wait until only the READY light is lit before performing the next step.

2. **Put the CORMS32 diskette in the diskette drive.**

   Insert the CORMS32 diskette in drive A.

3. **Reboot the computer.**

   Hold down [CTRL] and [ALT] and

   Press [DEL]

The screen displays:

```
Corvus Management Utility                Server:
Version [x.x]                            Drive:

(c) Copyright 1982...1985 Corvus Systems, Inc.

-----------------------------------------------

D - Mass Storage Diagnostic

T - Transfer Manager

O - Omninet Test

L - List Drives

-----------------------------------------------

Please select an option:
```

Press D

The screen displays:

```
MDIAG [x.xx]: Corvus Mass Storage Diagnostic
Select Drive                        Slt:1 Srv:0
-----------------------------------------

Active network nodes: ("*" indicate this node)

0.......................

-----------------------------------------

Select server number [0..63]:0
```

4. **Select the server number.**

   Enter the Omninet address of the OmniDrive. The address was determined in Chapter 1. For example, if the Omninet address is 1,

   Type 1

   Press [RETURN]

   To accept the default address of 0,

   Press [RETURN]

The screen displays:

```
MDIAG [x.xx]:  Corvus Mass  Storage  Diagnostic (c)
Copyright 1985 Corvus Systems, Inc.  Slt:  1 Srvr:  1

      --------------------------------

 D -  Select Drive
 V -  Version Check
 P -  Park Heads for Shipment
 X -  Exercise Drive
 C -  Check for Bad Tracks
 S -  Show Results


 F -  Format Drive
 U -  Update Firmware
 M -  Modify Parameters


 N -  Set Diag Data File Name
 A -  Advanced Options


 E -  Exit

      --------------------------------

Select diagnostic option:
```

5. **Select update firmware.**

   Press U

The screen displays:

```
The selected option may destroy data on the  drive.
Ensure the correct device is selected.

FORMAT and UPDATE options require  the  firmware file to
be on a controller other than the selected device.

Selected device is slot 1, server 0, drive 1.

Continue?  [Y/N]:N
```

The firmware file is on the CORMS32 diskette.

Press Y

The screen display is similar to:

```
Change drive tables?  [Y/N]:N
```

Press [RETURN]

The screen display is similar to:

```
Enter firmware file name:  ODRV.FIRMWARE
```

6. **Enter the firmware file name.**

   The firmware code is contained in the ODRV.FIRMWARE file. This file is included on the CORMS32 diskette. Accept the suggested file name.

   Press [RETURN]

   The screen displays:

```
Firmware file message:  ODRV1.7--CONST II -9/84

Continue? [Y/N]:Y
```

   Press [RETURN]

The screen displays:

```
Moving firmware from ODRV.FIRMWARE to drive
.....

Drive firmware updated.

Reset device--Turn drive power off then on again.

Press [space] to continue.
```

7. **Return to the diagnostic program main menu.**

   Press [SPACE]

8. **Exit the diagnostic program.**

   Press E

9. **Remove the CORMS32 diskette and reset the OmniDrive.**

   Remove CORMS32. Turn off the OmniDrive, wait ten seconds and then turn it back on. Wait until only the READY light is lit before continuing with the system generation process.

FINDING A FREE AREA

To add Constellation II for the IBM PC, you must first find a free area of at least 2848 blocks on the OmniDrive. Log on as the network manager at a computer that already works on the network and select the drive you want to contain the Constellation II system information. Enter the volume manager and select the free space option to list the free areas and their addresses.

If the largest free area on the drive is 2848 blocks or greater, note the starting address of this unused area. Although the system generation program should automatically suggest this address, write it down anyways, just for reference.

If the largest area on the drive is less than 2848 blocks, create an area of at least 2848 blocks by deleting existing volumes. For instructions, see the manager's guide for the existing computer type.

Once an area of 2848 blocks is freed, note the free area's address. This address will be used in step 8 of the subsection "Modifying an Existing Drive." If you clear an area, be sure to write down its address; if an incorrect address is used, existing data could be overwritten.

Return to the Volume Manager program and continue to the next section.

CHECKING NAMES

The Constellation II system volumes and user accounts for the IBM PC have preassigned names. Existing volumes and user accounts cannot have the same names as those created when generating Constellation II for the IBM PC.

To list the volume names, select the list volumes option from the volume manager main menu. If any of the existing volumes are called IBMMS, IBMBACK, IBMBOOT, or IBMSYS, select the *change volume attributes* option of the Volume Manager program to change the names of the existing volumes.

After checking and correcting volume names, exit to the Constellation II main menu and select the *user manager* option.

To check the user names, select the ilist users and devices option from the User Manager program. If any of the existing user accounts are named IBMGR, IBMBACKUP, IBMUSER, or TEMP, create new user accounts with different names, but leave all other attributes identical. Remove the duplicate user names and be sure to tell the affected users about the changes.

After checking and correcting user names, return to the Constellation II main menu.

ATTACHING THE TAP CABLE TO THE CONVENIENCE CONNECTOR

Before you complete the steps in the next section to initialize your OmniDrive with Constellation II software for the IBM PC, you *must* disengage the tap cable to your Omnidrive from the network and attach the cable instead to your IBM PC with a convenience connector.

Adding to an Existing OmniDrive

This section explains how to add Constellation II software for the IBM PC to an existing network of different computer types using an OmniDrive.

It is assumed that the OmniDrive is initialized and works with a computer that uses Constellation II software.

MODIFYING AN EXISTING DRIVE

After checking the addresses for a free area and making sure no volume or user names conflict, modify the existing OmniDrive. Make sure the OmniDrive to be modified is turned on, and remember that the IBM must be connected to the OmniDrive with a convenience connector.

1. **Put the CORMS31 diskette in the IBM Personal Computer.**

   Insert the diskette in drive A.

2. **Reboot the computer.**

   Hold down [CTRL] and [ALT] and

   Press [DEL]

After a moment, the screen displays:

```
Corvus Management Utilities        Server:
Version [x.xx]                     Drive:


Corvus Management Utilities        Server:
Version [x.xx]                     Drive:
(c)Copyright 1982..1985  Corvus Systems, Inc.

-----------------------------------------

I - Initialize Drive

M - Mirror

L - List Drives

-----------------------------------------
```

Press I

The screen displays:

```
Enter SYSGEN Password:
```

3. **Enter the password.**

   Type HAI

   Press [RETURN]

   The password does not appear on the screen. The screen displays the main menu of the system generation program:

```
System Generation [x.xx]: MSDOS
Main Menu
(c) Copyright 1982...1985 Corvus Systems, Inc.
---------------------------------------
     I - Initialize a New Drive
     M - Modify an Existing Drive
     D - Display Drives On-line

     H - Help
---------------------------------------

Please select an option:
```

4. **Select the option to modify an existing drive.**

   Press M

The screen displays the drive modification menu:

```
System Generation [x.xx]: MSDOS
Modify an Existing Drive
-------------------------------------
M - Mix IBM with Other Computers
    using Constellation II

A - Add IBM to Apple II converting
    Constellation I

U - Upgrade Existing IBM Drive to
    Constellation II

I - Install a New Copy of an
    Operating System

E - Exit
-------------------------------------

Please select an option:
```

5. Select the option to mix with other computer types.

Press M

The screen displays:

```
Drive number: 1
```

6. **Select the drive to modify.**

   Enter the Omninet address of the OmniDrive that was checked for names and free space in the previous section. Make sure the correct address is entered, since information on the specified drive may be lost if the wrong one is selected. After entering the Omninet address,

   Press [RETURN]

   The screen displays:

```
Please select drive to be modified.

    Server number: 0
```

7. **Select the drive number.**

   An OmniDrive is always drive 1. To accept the default,

   Press [RETURN]

The screen display is similar to:

```
Selected drive is server 0, drive 1.
Total drive capacity is 21600 blocks.

Please enter starting disk
address of system volumes: 2757
```

8. Select the system volume address.

The program automatically suggests the largest free area. Either accept the suggested area or enter the address noted in the section "Finding a Free Area" if it is different. After selecting an address,

Press [RETURN]

The screen display is similar to:

```
Blocks 2757 through 5604 will be overwritten.

OK to modify the drive?(Y/N)N
```

9. Initialize the drive.

Press Y

Press [RETURN]

The screen display is similar to:

```
Selected drive is server 0, drive 1.
Opening file BOOT.IBMPC
Mounting volume CORVUS from server SERVER0 at address 0 on unit 12
Copying file ..........
Boot table updated.

Adding users to server SERVER0 at address 0
.....
IBMSYS volume initialized.
IBMBOOT volume initialized.
IBMBACK volume initialized.
IBMMS volume initialized.
.............

-------------------------------------
```

After a minute, the screen display is similar to:

```
Selected drive is server 0, drive 1.

Loading program UPDATE ...

Copying contents of floppy .......
```

The remainder of the process involves copying Constellation II software from two diskettes to the volumes just initialized. After the first diskette, CORMS31, is copied, the screen requests CORMS32. **Insert** CORMS32 and **press** [SPACE].

After it is copied, the screen displays:

```
Selected drive is server 0, drive 1.

Update completed.
Please Reboot.
```

11. Insert the IBM system diskette and reboot the computer.

Insert the system diskette in drive A. Hold down [CTRL] and [ALT] and

Press [DEL]

The screen prompts you to enter the date and time. **Type** the date and time. The screen displays the operating system prompt.

Go to the next section to make the Corvus Boot Diskette.

MAKING THE CORVUS BOOT DISKETTE

In this section you will make the Corvus Boot Diskette and in the following section you will log on with the new diskette and copy the Constellation II MS-DOS utility programs to IBMMS, the MS-DOS volume created during system generation.

Once user names and accounts have been created by the system manager, all users will be able to activate their own volumes directly from the MS-DOS operating system.

Corvus provides a program called MAKEDISK to make boot diskettes. You should have a blank diskette that can be made into the boot diskette, or you can use the fixed disk in an IBM XT or AT as its boot disk. Each user must have either a copy of the boot diskette or the files on his fixed disk.

The diskette must not be write-protected. However, to be made into a Corvus Boot Disk, the fixed disk must have the MS-DOS system files already on it.

Follow the steps below to format a diskette and use MAKEDISK to make the Corvus Boot Diskette. *Skip step 1 if you are setting up a fixed disk as the boot disk.* The screen should be displaying the prompt for drive A or the fixed disk, with the system diskette in drive A or the system files on the fixed disk.

1. **Format a diskette using the /S option.**

   Type FORMAT B: /S

   Press [RETURN]

The FORMAT program prompts you to insert the blank diskette in drive B. **Insert a blank diskette or an old version of a boot diskette and press** [RETURN]. After the diskette is formatted remove it from the drive and return to the system prompt.

2. **Insert the CORMS33 diskette in drive A.**

3. **Run the MAKEDISK program.**

   The MAKEDISK program transfers the Corvus files needed to make a boot diskette. MAKEDISK can also copy the files to the fixed disk on an IBM XT or AT. You must specify which drive you want to receive the files. For example, to make a boot diskette with a diskette in drive B,

   Type MAKEDISK B:

   Press [RETURN]

   To make a fixed disk on drive C into the Corvus Boot disk and eliminate the need for a boot diskette,

   Type MAKEDISK C:

   Press [RETURN]

The screen displays:

```
Insert diskette for drive A

and strike any key when ready
```

The CORMS33 diskette is already in drive A — do not remove the diskette.

Press [SPACE] to continue.

The screen displays:

```
Place formatted disk in drive B:
Strike any key to continue . . .
```

If you specified a fixed disk or drive B on an IBM with two diskette drives, press any key and the program will begin copying files.

If you have only one diskette drive, the procedure varies a bit. After you insert the formatted disk in the drive and press a key, the screen displays:

```
Insert disk with batch file
and press any key when ready
```

Return the CORMS33 diskette to the diskette drive and press any key.

Now the COPY program prompts you for the diskettes for drives A and B as needed.

MAKEDISK copies the files CORDRV.BIN, NETPRINT.BIN, CONFIG.SYS, PBOOT.DAT, and CNP.COM onto the formatted diskette or the fixed disk. After the files are copied, remove CORMS33 and place it with the other Corvus diskettes.

Remove the new boot diskette and label it *Corvus Boot Diskette*. Use the DISKCOPY program to make a copy of this diskette for each IBM PC user on the network. Make sure to write-protect the Corvus Boot Diskette.

COPYING CONSTELLATION II UTILITIES

The steps below show how to put Corvus utilities in the volume IBMMS, which was created during system generation. All IBM network users can share programs and other files in IBMMS after their user accounts are established. As network manager, you will ensure that IBMMS will be write-protected for all users except one, IBMUSER, a user account created during system generation. IBMUSER is a name generally reserved for the system manager. Log on as IBMUSER to copy files into IBMMS.

Corvus creates IBMMS to hold Corvus utilities (including SPOOL.EXE, DESPOOL.EXE, and MNTMGR2.EXE) and other programs that all users can share and can access directly from the MS-DOS operating system. These programs will be discussed in the *Network User's Guide for the IBM PC.*

1. Reboot the computer.

Insert the Corvus Boot Diskette made in the previous section into drive A, or just reboot an XT or AT whose fixed disk has the Corvus boot files.

Hold down [CTRL] and [ALT] and

Press [DEL]

The screen displays the Constellation II log-on message, similar to:

```
        *
       * *
C O R V U S   S Y S T E M S

     CONSTELLATION II


Please enter your name:


  Version: x.xx       Boot Server: NN      Station: xx
```

2. **Log on as IBMUSER.**

   Type IBMUSER

   Press [RETURN]

The screen display is similar to:

```
Mounting volume IBMMS from server SERVER00 on UNIT  C:

Corvus-IBM driver CORDRV [x.xx] installed.

Installing Corvus Printer Driver NETPRINT [x.xx] for the IBM PC.
Using "PRINTER" AND disk server SERVER00."
NETPRINT installed.
```

The screen prompts you to enter the date and time. **Type** the date and time. The screen displays the operating system prompt. Note the mount unit for the volume IBMMS.

3. **Copy the Corvus utilities to the IBMMS volume.**

   DO NOT use the DISKCOPY, SYS, or FORMAT programs with a Corvus volume as the result is unpredictable and data could be destroyed. To copy files when Corvus volumes are involved *always* use the COPY command.

   Insert the CORMS33 diskette in drive A.

   Copy all the files from CORMS33 to IBMMS. For example, if IBMMS is mounted on unit C,

   Type COPY A:*.* C:

   Press [RETURN]

The programs just copied, SPOOL.EXE, DESPOOL.EXE, and MNTMGR2.EXE, are explained in the *Network User's Guide for the IBM PC.*

The system generation process is complete.

What's Next?

Connect your newly initialized OmniDrive to your existing network. Refer to the *Omninet Hardware Installation Guide* if you need help with network installation. Then go to Part Two to plan and manage your network.

PART ONE
Chapter 5

Adding an IBM PC and an OmniDrive to a Network of Other Computer Types

Contents

143 Introduction

144 Preparing for Constellation II
144 Copying Diskettes

146 Initializing the OmniDrive
147 System Generation Program
162 Making the Corvus Boot Diskette
166 Copying Constellation II Utilities

170 Updating the Firmware

178 Introduction to Merging Tables
178 Setting the Switches
179 Merging User Tables
186 Merging Boot Files

192 What's Next?

Introduction

This chapter is aimed at the network manager who is adding an IBM PC, an OmniDrive, and Constellation II software to a Constellation II network of other computer types (e.g. Macintosh).

You will be initializing a new OmniDrive and merging user tables and boot files so that all OmniDrives recognize network users and their passwords as being valid.

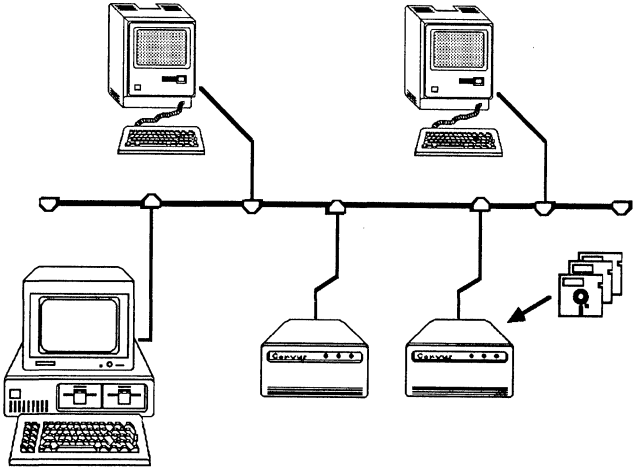

Preparing for Constellation II

A preliminary step should be taken before an OmniDrive can go through system generation, or initialization, for use with the IBM Personal Computer. Make copies of the distribution diskettes. The copies of the diskettes should be used for the system generation process, and the originals should be stored in a safe place.

COPYING DISKETTES

1. **Put the IBM MS-DOS system diskette into the diskette drive.**

   Insert the IBM MS-DOS system diskette into drive A.

2. **Turn on the computer.**

   The screen prompts you to enter the date and time. Type the date and time. The screen displays the operating system prompt.

3. **Copy the Corvus diskettes.**

Make copies of all the Corvus diskettes. Use the MS-DOS DISKCOPY program to copy all four diskettes. *Use only double-sided diskettes.* The *IBM Disk Operating System* guide explains how to use DISKCOPY.

Use the copies to generate your system. Store the originals in a safe place. If any problems arise, the source diskettes will be available.

Initializing the OmniDrive

During system generation, or the process of initializing an OmniDrive with Constellation II software, names, passwords, volumes and files are created. Naming the volumes, drives, and files keeps important information in recognizable areas. Passwords keep the information in the volumes and files secure.

For example, the drive password is the key to protecting the information on the drive from unauthorized changes. If only you know the password, only you can change the information.

To initialize the OmniDrive with Constellation II software, you will need to boot your IBM PC with the CORMS31 diskette. Booting with CORMS31 automatically runs the system generation program.

The system generation program creates a CORVUS volume and the IBMMS, IBMSYS, IBMBOOT, and IBMBACK volumes. The system generation program also creates tables within the CORVUS volume. These tables include user, volume, and access tables. The system generation program creates users including IBMGR, IBMUSER, IBMBACKUP, and TEMP.

Users IBMGR and IBMUSER are generally reserved for the network manager. Part Two will explain these volumes and users in detail.

SYSTEM GENERATION PROGRAM

Please follow the steps below to run the system generation program.

1. **Put the CORMS31 diskette in the computer.**

   Insert the CORMS31 diskette in drive A.

2. **Reboot the computer.**

   Hold down [CTRL] and [ALT] and

   Press [DEL]

After a minute the screen displays:

```
Corvus Management Utilities          Server:
Version [x.xx]                       Drive:
(c) Copyright 1982..1985  Corvus Systems, Inc.

-----------------------------------------


I - Initialize Drive

M - Mirror

L - List Drives


-----------------------------------------


Please select an option:
```

Press I

The screen displays:

```
Enter SYSGEN Password:
```

3. **Enter the password.**

   Type HAI

   Press [RETURN]

The password does not appear on the screen. The screen displays the main menu of the system generation program:

```
System Generation [x.xx]: MSDOS
Main Menu
(c) Copyright 1982...1985 Corvus Systems, Inc.
-------------------------------------
I - Initialize a New Drive
M - Modify an Existing Drive
D - Display Drives On-line

H - Help
-------------------------------------

Please select an option:
```

4. Select the option to initialize a new drive.

Type I

The screen displays:

```
Please select drive to be initialized.

     Server number: 1
```

5. **Select the server address.**

   Enter the Omninet address of the OmniDrive. The address was determined in Chapter 1. Remember that each OmniDrive must have a unique address.

   After entering the Omninet address,

   Press [RETURN]

   The screen displays:

```
Drive number: 1
```

6. **Select the drive.**

   An OmniDrive is always drive 1. To accept the suggested drive number,

   Press [RETURN]

The screen display is similar to:

```
System Generation [x.xx]: MSDOS
Initialize a New Drive

----------------------------------------
Please select drive to be initialized.

     Server number: 1
     Drive number:  1

The drive you have selected is already initialized.
You are about to destroy all the data on it.


Continue? [Y/N]N
```

Type Y

Press [RETURN]

The screen display is similar to:

```
Selected drive is server 1, drive 1.

Enter disk server name: SERVER01
```

7. **Name the OmniDrive server.**

The OmniDrive network disk system has a built-in disk server that is identified by name. Constellation II uses the server name to recognize drives on the network. Every mass storage system must have a server name.

The suggested name is formed from the server address, but a server may have any name up to ten characters in length.

Choose a name that begins with a letter, and write the name in the Omninet Device Table in Appendix B for future reference. Then **type** the name and **press** [RETURN]. For example,

Type SERVER01

Press [RETURN]

The screen displays:

```
Enter disk server password: SERVER01
```

8. Assign the server password.

The suggested server password is also formed from the server address, but a server may have any password up to eight characters. Choose a password that begins with a letter, and write the password in the Omninet Device Table in Appendix B for future reference. Then **type** the password and **press** [RETURN]. For example,

Type SERVER01

Press [RETURN]

The screen displays:

```
Enter drive name: DRIVE1
```

9. **Name the drive.**

The OmniDrive has only one disk associated with its server, but other disk servers can have more than one disk attached. Constellation II uses the drive name to recognize individual disks connected to each server on the network. Every disk must have a drive name.

The suggested drive name is DRIVE1, but a drive may have any name up to 10 characters. Choose a name that begins with a letter, and write the name in the Omninet Device Table in Appendix B for future reference. Then **type** the name and **press** [RETURN]. For example,

Type DATA

Press [RETURN]

To accept the suggested drive name,

Press [RETURN]

The screen displays:

```
Enter drive password: DRIVE1
```

10. Assign the drive password.

The drive password is the key to protecting the information on the drive from unauthorized changes. If only you know the password, only you can change the information.

The suggested drive password is DRIVE1, but a drive may have any password up to eight characters. Choose a password of up to eight characters, either letters or numbers, with the first character a letter. Write the password in the Omninet Device Table in Appendix B for future reference. Then **type** the password and **press** [RETURN]. For example,

Type LOCK

Press [RETURN]

To accept the suggested drive password,

Press [RETURN]

The screen display is similar to:

```
Selected drive is server 1, drive 1
Total drive capacity is 21600 blocks.

Do you want to use the
standard configuration (Y/N)? Y
```

11. Choose the desired configuration.

The configuration sets the size and attributes of the CORVUS volume. Because you are setting up an OmniDrive with Constellation II for the IBM PC, you will accept the standard the configuration.

Press [RETURN]

12. Initialize the additional drive.

Type Y

Press [RETURN]

The screen display is similar to:

```
Blocks 9 through 309 will be overwritten.
OK to initialize the additional drive?(Y/N)Y
```

Press [RETURN]

The screen displays:

```
Selected drive is server 1, drive 1.

Initializing CORVUS volume...

[   0] ....................................
[  40] ....................................
[  80] ....................................
[ 120] ....................................
[ 160] ....................................

196 system table blocks initialized.

-----------------------------------------------
```

The screen then displays:

```
Selected drive is server 1, drive 1.
Opening file BOOT.IBMPC
Mounting volume CORVUS from server SERVER0 at address 0 on unit 12
Copying file ...........
Boot table updated.
Adding users to server SERVER1 at address 01
.....
IBMSYS volume initialized.
IBMBOOT volume initialized.
IBMBACK volume initialized.
IBMMS volume initialized.
.............

-------------------------------------
```

The remainder of the system generation process involves copying Constellation II software from two diskettes to the volumes just initialized. After the first diskette, CORMS31, is copied, the screen requests CORMS32. **Insert CORMS32 and press** [SPACE]. After both diskettes are copied, the screen displays:

```
Selected drive is server 1, drive 1.

Update completed.
Please Reboot.
```

13. Reset the OmniDrive and reboot the computer.

Turn off the OmniDrive, wait 10 seconds, then turn it back on. Wait until only the READY light is lit before rebooting the computer. **Insert the MS-DOS system diskette in drive A,** then hold down [CTRL] and [ALT] and **press** [DEL].

After you type the date and time, the screen displays the operating system prompt.

The OmniDrive network disk system is now initialized. Go to the next section to continue setting up your IBM PC network system.

MAKING THE CORVUS BOOT DISKETTE

In this section you will make the Corvus Boot Diskette and in the following section you will log on with the new diskette and copy the Constellation II MS-DOS utility programs to IBMMS, the MS-DOS volume created during system generation.

Once user names and accounts have been created by the network manager, all users will be able to activate their own volumes directly from the MS-DOS operating system.

Corvus provides a program called MAKEDISK to make boot diskettes. You should have a blank diskette that can be made into the boot diskette, or you can use the fixed disk in an IBM XT or AT as its boot disk. Each user must have either a copy of the boot diskette or the files on his fixed disk.

The diskette must not be write-protected. However, to be made into a Corvus Boot Disk , a fixed disk must have the MS-DOS system files already on it.

Follow the steps below to format a diskette and use MAKEDISK to make the Corvus Boot Diskette. *Skip step 1 if you are setting up a fixed disk as the boot disk.* The screen should be displaying the prompt for drive A or the fixed disk, with the system diskette in drive A or the system files on the fixed disk.

1. **Format a diskette using the /S option.**

   Type FORMAT B: /S

   Press [RETURN]

The FORMAT program prompts you to insert the blank diskette in drive B. **Insert a blank diskette or an old boot diskette and press** [RETURN]. After the diskette is formatted, remove it from the drive and return to the system prompt.

2. **Insert the CORMS33 diskette in drive A.**

3. **Run the MAKEDISK program.**

   The MAKEDISK program transfers the Corvus files needed to make a boot diskette. MAKEDISK can also copy the files to the fixed disk on an IBM XT or AT. You must specify which drive you want to receive the files. For example, to make a boot diskette with a diskette in drive B,

   Type MAKEDISK B:

   Press [RETURN]

   To make a fixed disk on drive C into the Corvus boot disk and eliminate the need for a boot diskette,

   Type MAKEDISK C:

   Press [RETURN]

The screen displays:

```
Insert diskette for drive A:

and strike any key when ready
```

The CORMS33 diskette is already in drive A—do not remove the diskette.

Press [SPACE]

The screen display is similar to:

```
Place formatted disk in drive B:
Strike any key when ready . . .
```

If you specified a fixed disk or drive B on an IBM with two diskette drives, press any key and the program will begin copying files.

If you have only one diskette drive, the procedure varies a bit.

After you insert the formatted disk in the drive and press a key, the screen displays:

```
Insert disk with batch file
and press any key when ready
```

Return the CORMS33 diskette to the diskette drive and press any key.

Now the COPY program prompts you for the diskettes for drives A and B as needed.

MAKEDISK copies the files CORDRV.BIN, NETPRINT.BIN, CONFIG.SYS, PBOOT.DAT, and CNP.COM onto the formatted diskette or the fixed disk. After the files are copied, remove CORMS33 and place it with the other Corvus diskettes.

Make sure to write-protect the Corvus Boot Diskette. Use the MS-DOS DISKCOPY command to make a copy of the Corvus Boot Diskette for each MS-DOS user on the network.

COPYING CONSTELLATION II UTILITIES

The steps below show how to put Corvus utilities in the volume IBMMS, which was created during system generation. All IBM network users can share programs and other files in IBMMS after their user accounts are established. As network manager, you will ensure that IBMMS will be write-protected for all users except one, IBMUSER, a user account created during system generation. IBMUSER is a name generally reserved for the network manager. Log on as IBMUSER to copy files into IBMMS.

Corvus creates IBMMS to hold Corvus utilities (including SPOOL.EXE, DESPOOL.EXE, and MNTMGR2.EXE) and other programs that all users can share and can access directly from the MS-DOS operating system. These programs will be discussed in the *Network User's Guide for the IBM PC.*

1. **Reboot the computer.**

   Insert the Corvus Boot Diskette made in the previous section into drive A, or just reboot an XT or AT whose fixed disk has the Corvus boot files.

   Hold down [CTRL] and [ALT] and

   Press [DEL]

The screen displays the Constellation II log-on message, similar to:

```
                    *
                  * *
                C O R V U S   S Y S T E M S

                     CONSTELLATION II


Please enter your name:


  Version: x.xx       Boot Server: NN      Station: xx
```

2. **Log on as IBMUSER.**

   Type IBMUSER

   Press [RETURN]

The screen display is similar to:

```
Mounting volume IBMMS from server SERVER01 on UNIT  C:

Corvus-IBM driver CORDRV [x.xx] installed.

Installing Corvus Printer Driver NETPRINT [x.xx] for the IBM PC.
Using Printer "PRINTER" and Disk Server "SERVER01."
NETPRINT installed.
```

The screen prompts you to enter the date and time. Type the date and time. The screen displays the operating system prompt. Note the mount unit for the volume IBMMS in the upper right-hand corner of the screen.

3. **Copy the Corvus utilities to the IBMMS volume.**

   DO NOT use the DISKCOPY, SYS, or FORMAT programs with a Corvus volume as the result is unpredictable and data could be destroyed. To copy files when Corvus volumes are involved *always* use the COPY command.

   Insert the CORMS33 diskette in drive A.

   Copy all the files from CORMS33 to IBMMS. For example, if IBMMS is mounted on unit C,

   Type COPY A:*.* C:

   Press [RETURN]

The screen displays the operating system prompt. You are finished with the first part of system generation for the additional drive.

Connect the new OmniDrive to your network. Make sure that all OmniDrives are on the network. If you need help installing the new OmniDrive on your network, refer to the *Omninet Hardware Installation Guide.*

Please go to the next section to update the firmware on your OmniDrives.

Updating the Firmware

Before the IBM Personal Computer can communicate with the OmniDrive, a firmware file must be copied from diskette to the drive. The firmware acts as an interpreter for drive commands between the computer and the OmniDrive.

Copying firmware onto the drive is known as updating the firmware. Use the mass storage diagnostic program, found on the CORMS32 diskette, to update the firmware.

Follow the steps below for each OmniDrive on your network. For the first OmniDrive, begin at number one. For the next OmniDrives, begin at step number three and select the correct server address for each OmniDrive.

1. **Put the CORMS32 diskette in the diskette drive.**

   Insert the CORMS32 diskette in drive A.

2. **Reboot the computer.**

   Hold down [CTRL] and [ALT] and

   Press [DEL]

After a minute, the screen displays:

```
Corvus Management Utility                Server:
Version [x.x]                            Drive:

(c) Copyright 1982...1985 Corvus Systems, Inc.

-----------------------------------------------

D - Mass Storage Diagnostic

T - Transfer Manager

O - Omninet Test

L - List Drives

-----------------------------------------------

Please select an option:
```

Press D

The screen displays:

```
MDIAG [x.xx]: Corvus Mass Storage Diagnostic
Select Drive                          Slt:1 Srv:0
-----------------------------------------

Active network nodes: ("*" indicate this node)

0.......................

-----------------------------------------

Select server number [0..63]:0
```

3. **Select the server number.**

Enter the Omninet address of the OmniDrive. The address was determined in Chapter 1. For example, if the Omninet address is 1,

Press 1

Press [RETURN]

The screen displays:

```
MDIAG [x.xx]:  Corvus Mass  Storage  Diagnostic (c)
Copyright 1985 Corvus Systems, Inc.  Slt:  1 Srvr:  1

      ---------------------------------

 D -  Select Drive
 V -  Version Check
 P -  Park Heads for Shipment
 X -  Exercise Drive
 C -  Check for Bad Tracks
 S -  Show Results


 F -  Format Drive
 U -  Update Firmware
 M -  Modify Parameters


 N -  Set Diag Data File Name
 A -  Advanced Options


 E -  Exit

      ---------------------------------

Select diagnostic option:
```

4. Select update firmware.

Press U

The screen displays:

```
The selected option may destroy data on the  drive.
Ensure the correct device is selected.

FORMAT and UPDATE options require  the  firmware file to
be on a controller other than the selected device.

Selected device is slot 1, server 1, drive 1.

Continue?  [Y/N]:N
```

The firmware file is on the CORMS32 diskette.

Press Y

The screen display is similar to:

```
Change drive tables?  [Y/N]:N
```

Press [RETURN]

The screen display is similar to:

```
Enter firmware file name:  ODRV.FIRMWARE
```

5. **Enter the firmware file name.**

The firmware code is contained in the ODRV.FIRMWARE file. This file is included on the CORMS32 diskette. Accept the suggested file name.

Press [RETURN]

The screen displays:

```
Firmware file message:  ODRV1.7--CONST II -9/84

Continue? [Y/N]:Y
```

Press [RETURN]

The screen displays:

```
Moving firmware from ODRV.FIRMWARE to drive
.....

Drive firmware updated.

Reset device--Turn drive power off then on again.

Press [space] to continue.
```

6. Return to the diagnostic program main menu.

Press [SPACE]

7. Exit the diagnostic program.

Press E

8. Remove the CORMS32 diskette and reset the OmniDrive.

Remove CORMS32. Turn off the OmniDrive, wait ten seconds, then turn it back on. Wait until only the READY light is lit before going to the next section to merge tables.

Introduction to Merging Tables

This section explains how to update an existing Omninet network of IBM Personal Computers using Constellation II software to accept more than one OmniDrive or disk server. The disk servers must have ROM version DSD9B or later. Contact a Corvus Authorized Service Center for further information.

Adding multiple servers to a network with IBM PCs and other computer types requires checking the Omninet address, setting the bias switch and merging user tables and boot files.

You must merge user tables and boot files on all OmniDrives in order to insure that each user who boots on the network can reach any server (or OmniDrive), be recognized by that server, and be able to log on to the network system at any time.

SETTING THE SWITCHES

Before connecting the new server to the network, make sure all servers have unique addresses and their bias switches are set properly. The first server on the network must have the bias on, and all other servers must have the bias off. Refer to Chapter 1 to make sure that you set the addresses and set the bias properly.

MERGING USER TABLES

Merging user tables requires complete control of the network. Make sure that no one is trying to use the network when following the steps below. **Turn off all existing servers.**

Connect the OmniDrive you have just initialized and the IBM PC to the Omninet network. The new OmniDrive will need to be on your network in order to merge users tables on all OmniDrives.

Use this section to merge the user tables. Make sure the new server is turned on and the existing servers are left turned off until instructed to turn them on.

1. **Log on as network manager.**

   Log on at the IBM PC. Insert the Corvus boot diskette and turn on the computer. The system manager's user name is IBMGR and the password is HAI. After you log on, the screen will display the Constellation II main menu.

2. **Turn on all servers.**

   After turning the servers on, wait until only the red indicator light labeled READY is lit on all drives before performing the next step.

3. **Select the drive management option.**

   Press D

   The screen displays the drive management main menu.

4. **List all servers on the network.**

   Press L

   The screen display is similar to:

```
CORVUS UTILITY [x.xx]       DS
List Drives              Drive
----------------------------------------
Updating Active User Table ...

Valid servers are: SERVER0, SERVER1

Press <space> to continue
```

   All servers on the network should be listed. If they are not, use the list drives option until they are listed. Once all servers are listed, **press** [SPACE] to return to the drive management menu, and go to the next step.

5. **Select an existing server.**

   Press S

The screen display is similar to:

```
CORVUS UTILITY [x.xx]       DS
Select Drive              Drive
Enter drive information:

Valid servers are: SERVER0, SERVER1
Enter server name: [SERVER0]
```

Type the server name, drive name and password for an existing server. Do not select the new server.

Press [RETURN]

The screen displays the drive management main menu again.

6. **Select the user manager.**

   Press U

   The screen displays the user manager main menu.

7. **Select the merge user tables option.**

   Press M

After a moment, the screen display is similar to:

```
User Manager [x.xx]                    Server: Server1
Merger User Tables                     Drive:  Drive1

-----------------------------------------------------

The user table from the current server SERVER00 will be
merged onto the following server(s):

SERVER01

OK to continue?[Y/N]:Y
```

Press [RETURN]

The screen then displays:

```
Looking at server ORIGINAL


User A2MGR added
User A2BACKUP added
All servers updated
---------------------------------------

Press <space> to continue
```

The program automatically checks all the servers on the network and displays a similar list for each. Accept the suggested responses until all servers are updated.

Press [SPACE]

The screen displays the user manager main menu. Return to the drive management main menu.

8. Repeat the steps for the new server.

Repeat steps 5 through 7 above, selecting the new server in step 5.

The screens should be similar to:

```
The user table from the current server SERVER01
Will be merged onto the following server(s):

Server ORIGINAL

OK to continue?[Y/N]:Y
```

and:

```
Looking at server ORIGINAL

User IBMBACKUP aded
User IBMGR added
User IBMUSER added
User TEMP added
All server updated.
-----------------------------------

Press <space> to continue
```

When finished merging the user tables, **press** [EXIT] and choose the select drive option. Select a drive and then enter the user management menu and use the *List users* option. Repeat these steps for each server to verify that all user tables are identical. Go to the next section to merge boot files.

Merging Boot Files

Follow the steps below to add all the existing boot files to the new server, and to add the IBM boot file to all the existing servers. *The IBM boot file will need to be added only if an IBM PC has not been on the network before.*

1. **Turn off the new server.**

2. **Log on at a computer other than the IBM PC.**

3. **Turn on the new server.**

   Turn on the system just generated. After turning the server on, wait until only the drive's red indicator light labeled READY is lit before performing the next step.

4. **Select the drive management option.**

   Press D

   The screen displays the drive management main menu.

5. **Select an existing server.**

   Press S

   Type the server name, drive name and password for the new server.

   Press [RETURN]

6. **Select the boot manager.**

   Press B

   Some computers may unmount a volume and display a message to that effect on screen.

   Press [SPACE] to continue the program if a volume is unmounted.

The screen displays the boot manager main menu:

```
Boot Manager [x.xx]        DS ORIGINAL
Main Menu                 Drive DRIVE1
---------------------------------------
A - Add boot file
R - Remove boot file
L - List boot files

M - Merge boot files

H - Help
E - Exit

---------------------------------------
Please select an option:
```

7. **Select merge a boot file.**

Press M

The screen displays:

```
 Boot Manager [x.xx]       DS ORIGINAL
 Add a boot file         Drive DRIVE1
---------------------------------------

Boot files from the current server ORIGINAL
will be merged onto the following server (s):

Server SERVER1

OK to continue? [Y/N]:Y
```

Press [RETURN]

The screen then displays:

```
Current server contains 1 boot file(s).

Mounting volume CORVUS from server SERVER1
on unit 10

Press <space> to continue.
```

Press [SPACE]

The screen display is similar to:

```
Looking at server ORIGINAL

CHECKING FOR DUPLICATE BOOT FILES

CRUNCHING BOOT FILES IN CORVUS VOLUME

ADDING BOOT FILES FROM SOURCE SERVER...

Adding file BOOT.Apple..table updated.

Press <space> to continue
```

Press [SPACE]

The screen displays:

```
All servers checked

----------------------------

Press <space> to continue
```

Press [SPACE]

All existing servers must have the proper files for the network to function. Update all servers to ensure that the file is on each of them.

8. **Repeat the steps to merge boot files for each server on the network.**

   Repeat steps 5 through 7 for each server on the network. Choose the computer types on the network that have boot files. Computers that use boot files are:

Computer Type	File Name
Corvus Concept	BOOT.CONCEPT
APPLE II	BOOT.APPLE2
SNA Gateway	BOOT.CONCEPT2
IBM PC	BOOT.IBMPC
Corvus Printer Server	BOOT.PRINTSRV
TI PROFESSIONAL	BOOT.TIPC

   The IBM boot file must be added only if IBM PCs were not part of the network before this new drive was generated.

What's Next?

Now that you have initialized your new OmniDrive and have merged user tables and boot files on all OmniDrives on the network, go to Part Two to plan and manage your network.

PART TWO:

Network Management

Introduction to Part Two

Part Two is divided into three chapters. Chapter 6 provides you with an introduction to Constellation II software terminology for managing information on your OmniDrive. You will plan how many volumes and users you will need for your network and which volumes you feel should be accessible to particular users.

Next, you will go to Chapter 7 to perform the steps to set up your network by creating volumes, users and granting access to users. *If you have set up a Constellation II network before, use the steps that are briefly outlined in the "Network Checklist" to expand your network quickly.*

In Chapter 8 you will create and initialize the pipes area, a special volume that enables users of similar and dissimilar computer types to exchange information and to share printers. You will also learn how to maintain the pipes area.

PART TWO
Chapter 6

An Overview of Network Management

Contents

197 Introduction

198 Planning the Network

199 Volumes
200 User Volumes
200 Pipes Area

201 User Accounts
201 Users
202 Access

204 Network Summary

205 Menu Overview

207 What's Next?

Introduction

This chapter will introduce you to Constellation II software terminology and menus for managing and controlling access to the information on the OmniDrive. You will learn about the concept of dividing the OmniDrive into volumes and granting users access to the volumes. You might also need to consider creating a pipes area, a special volume that allows users of similar and dissimilar computer types to exchange information and to share printers. Most importantly, you will plan for your network by deciding how many users you will provide for and what kind of access those users should have to particular volumes.

At this point your network hardware should be set up—refer to the *Omninet Hardware Installation Guide* if you need help installing your network.

Planning the Network

Before several people can share a network, the network manager should determine the needs of the people, or users, that will use the network. You will need to write a list of the application programs, documents and any other information that will be shared.

Each user will need an account. You will need to plan the amount of space for each user on the OmniDrive. The allocation of space on the system should be determined before volumes are created.

Each user will also need a *Corvus Boot Diskette.*

Another point to keep in mind while you are planning your system, is that whenever you are adding users or devices on a network with more than one OmniDrive, update (or add users to) all OmniDrives. When the user boots, he can log on and gain access to any OmniDrive on the network.

All of these points should be considered before plunging into the Constellation II software. A little time spent planning can make the network manager's job much easier.

Volumes

The space for storing information on an OmniDrive is divided into volumes. Volumes are similar to floppy diskettes in that both store data or text. While there are standard sizes for diskettes, a volume can be set to a size that you choose.

To determine the best size for a volume, add the number of blocks of each application program and any other information that will be stored in the volume. Using this total, select the volume size. Generally, the standard volume size is large enough. If not, create a custom volume.

To determine the amount of free space available on your OmniDrive, refer to Chapter 7 under the *Volume Manager* section with the heading "Listing Volumes and Free Space."

USER VOLUMES

Different computer types may use the same operating system and in that case they can share a volume. Computers that use more than one operating system will need different volumes for each operating system. For example, an IBM PC using MS-DOS will need an MS-DOS volume, while a Macintosh will need a Mac volume.

Public volumes, accessible to all users, can contain programs or other information needed by everyone on the network. Before creating volumes, decide what programs or information items need to be in a public volume. Public volumes save users from copying programs into their own volumes.

When you create a volume, the default volume access type is read-write (R/W). You will generally want to accept the volume access default. This becomes the general access type for the volume.

PIPES AREA

The pipes area is a special volume you will need to create if you want to allow users to exchange information among similar and dissimilar computer types and to share a printer on the network. This is another volume that you should account for when planning your network. The pipes area must reside within the first 32,000 blocks on the OmniDrive.

User Accounts

Each user needs a **user account**, which identifies him within the Constellation II software. Once a user has a name, a password (optional for additional security) and a list of accessible volumes, that user has an individual user account for the network.

USERS

Users are the people who use the computer network. Each person needs a user name and password (optional). When you create user names and passwords, you should write them down in Appendix B for your records.

It is critical to keep the network manager's password and drive password confidential. These passwords control access to all information on the network.

ACCESS

Next decide which users will have access to which volumes. Individual users can have their own private volumes or share public volumes with others.

Each user on the network should have a **private account**, consisting of volumes known only to that user and to which he is granted read-write access.

In general, you create volumes with a general access type of R/W (read-write). You change only the user's access, if you wish, from the default of R/O (read-only) to R/W.

For example, if you grant user Chris R/O access to the volume IBMMS which has a general access type of R/W, Chris will not be able to write to IBMMS.

Conversely, if you create the volume IBMMS with a general access type of R/O, and grant user Chris R/W access to the volume, Chris will still not be able to write to IBMMS.

The most restrictive access type, read-only, takes precedence over read-write.

Grant users read-only access to shared or public volumes. Users can read and can run application programs from public volumes, but they cannot write to the volume. If two or more users write to a shared volume simultaneously, the information within the volume could be destroyed.

Unless you have special application software that allows users to share R/W volumes, two users should never be given R/W access to the same volume.

For example, **you will want to grant each user read-only access to IBMMS**, the volume created in Part One , because you copied all the Constellation II utilities to it during system generation.

Volumes are either **active** or **inactive.** A volume is active once it's **mounted,** that is, assigned to a **unit** letter, similar to a drive. Users can access only mounted volumes. An inactive volume is **unmounted,** that is, no longer assigned to a unit number.

Refer to the *Network User's Guide for the IBM PC* when you have completed this guide to learn how to use the *mount manager* program.

Network Summary

1. Write a list of the people who will be using the network.
2. Write a list of the programs and information that will be shared.
3. Create user names and passwords.
4. List the free space available on your OmniDrive.
5. Determine the name, password, size and access type for each volume.
6. If users will be sharing a network printer, include the PIPES volume on your volume list.
7. Give each user access to volumes.

It may take a trial and error period before you make a plan that is satisfactory, but some time spent planning the beginning can save time in the future.

One key to setting up and maintaining a network is to refer to records. Corvus recommends that you keep a network manager's notebook. Appendix B, the "Network Manager's Records" is an excellent place to record the names and attributes of users, volumes and network devices. Throughout this guide, you will be encouraged to record information as you create your network.

Menu Overview

The main Constellation II menu leads to all of the utility programs.

On the IBM PC, the screen will display:

```
CORVUS MANAGMENT UTILITY      Server:
Version[x.x]                  Drive:

(c)Copyright 1982..1985 Corvus Systems, Inc.
-------------------------------------------

  D - Drive Management
  B - Backup Utilities
  M - Maintenance Utilities
  C - Configure System

  U - Utility Server Manager
  T - Transfer Manager

  I - Initialize Drive
  L - List Drives
  H - Help

-------------------------------------------
```

To set up your network, you will be using mainly the Drive Management program and its submenus: user manager, volume manager and access manager. If you are going to create and initialize a Pipes Area, you will use the Maintenance Utilities program and its submenu, pipes management.

The submenu Backup Utilities includes the Mirror Server Manager and Internal Mirror Utilities programs which are each explained in their own guides.

Maintenance Utilities includes the Mass Storage Diagnostic program and the Omninet Test which is described in the *Network Diagnostics Guide for the IBM PC.* Semaphores is explained in Chapter 7. The Update Utilities program is used to update Constellation II utilities. Appendix D explains the procedure for updating Constellation II utilities.

The submenu configure is used to set the parameters for a local printer.

The submenu utility server manager is used to set printer server parameters.

Transfer Manager is found under the Constellation II main menu and is explained in the *Transfer Manager Guide* which is provided with the Bank.

The menu also shows the Initialize Drive program which you used in the first part of this guide during system generation.

What's Next?

Now that you have planned how many volumes and types of user accounts you will have on your network, turn to Chapter 7 and follow steps to manage users, volumes and access to the volumes.

PART TWO
Chapter 7

Setting up and Managing Your Network

Contents

212 **Introduction**

212 **Entering Constellation II**
212 Logging On
215 Entering Drive Management

218 **Network Checklist**
218 Adding Users
219 Adding Volumes
221 Granting Users Access to Volumes

222 **User or Device Manager**
223 Adding Users or Devices
228 Listing Users or Devices
230 Changing User Attributes
230 Removing Users or Devices

231 **Volume Manager**
232 Adding Volumes
238 Changing Volume Attributes
239 Listing Volumes and Free Space
244 Removing Volumes

245 **Access Manager**
245 Granting Users Access to Volumes
252 Listing Volume Access
253 Changing Volume Access
253 Removing Volume Access

254 Semaphore Manager
254 Drive Management Error -107
256 Entering the Semaphore Manager
259 Locking a Semaphore
260 Unlocking a Semaphore
262 Listing Semaphores
263 Clearing All Semaphores

264 What's Next?

Introduction

In this chapter you will create the volumes and user accounts you have planned for your network. You will grant users access to volumes and learn how to change user, volume, and access attributes. Have your list of users and public and private volumes ready for reference when creating your network. Refer to the User Table in Appendix B to record the names and passwords of the users you create and the access they have to private volumes. Also record the names and contents of public volumes. This chapter also shows you how to use the semaphore manager program.

Entering Constellation II

To enter Constellation II, make sure your OmniDrive is turned on and only the ready light remains lit.

LOGGING ON

1. **Insert the Corvus boot diskette.**

   Insert the *Corvus Boot Diskette* in drive A.

2. Turn on the computer.

The screen displays the Constellation II logon message:

```
*
   *
        C O R V U S   S Y S T E M S

              CONSTELLATION II
      *
             (LOGON Vx.xx)  (NN)

  *    *

Please enter your name __
```

3. **Log on as IBMGR with the password HAI.**

   Type IBMGR **and press** [RETURN].

   After a few moments, the screen displays the Constellation II main menu:

```
CORVUS MANAGEMENT UTILITY DS
Version [x.xx]          Drive
(C) Copyright 1982..1985 Corvus Systems, Inc.
-------------------------------------
       D - Drive Management
       B - Backup Utilities
       M - Maintenance Utilities
       C - Configure System

       U - Utility Server Manager
       T - Transfer Manager

       I - Initialize Drive
       L - List Drives
       H - Help
-------------------------------------
Please select an option: _
```

ENTERING DRIVE MANAGEMENT

1. **Select the drive management option.**

   If you receive the Constellation II error -107, go to the "Drive Management Error" section in Chapter 7 to correct the error.

   Otherwise, the screen displays:

```
CORVUS UTILITY [x.xx]    DS
Drive Management       Drive
-------------------------------------
       U - User/Device Manager
       V - Volume Manager
       A - Access Manager

       B - Boot Manager

       S - Select Drive
       L - List Drives
       E - Exit
-------------------------------------
Please select an option:
```

The screen on the preceding page is the drive management menu. The programs for creating volumes and user accounts are entered from this menu. The sections that follow in this chapter guide you through the programs to add users and volumes and to grant users access to volumes. Before you proceed, select the drive that you're going to manage.

2. **Choose the select drive option.**

   As you should remember, Constellation II is designed to support more than one server on a network. Each server has its own volumes.

   The select drive option lists the valid servers on the network and asks you to select the one you want to manage. If you only have one OmniDrive, only that server and drive name appear, and you are asked to enter the drive password.

   If you have multiple servers, though, the program displays the list of servers on the network and asks you to specify which one you want to manage. **Type** the server name for the desired drive and **press** [RETURN]. The screen then displays the drive name and asks for the drive password.

3. **Enter the drive password for the chosen drive.**

   As a security precaution, the password doesn't appear as you type it. **Type** the password and **press** [RETURN]. Now that you have selected the drive to manage, you can begin using the various manager programs.

Network Checklist

For those network managers who are already familiar with Constellation II and are adding to an existing network, a brief checklist of the steps to create volumes, users and to grant users access to volumes is provided in this section. Use the tables in Appendix B to record users and volumes you create.

CREATING USER ACCOUNTS

ADDING USERS

1. Select user/device manager. (p. 222)
2. Select drive.
3. Select add a user/device. (p. 223)
4. Select user addition. (p. 224)
5. **Type** the user name and password. (p. 224)
6. Enter the home disk server. (p. 225)
7. Accept the MS-DOS default for user type. (p. 226)
8. **Press** [RETURN] to add the user to the selected server. (p. 227)
9. **Press** [RETURN] again to update all servers on the network. (p.227)
10. **Press** [SPACE] to exit or **press** A to add more users to the network. You will begin the process again with step 5.

ADDING VOLUMES

1. Select volume manager. (p. 231)
2. Select drive.
3. Select add a volume. (p.232)
4. **Type** in the volume name. (p.232)
5. Accept the defaults for volume size, location and type. (p.233)
6. **Press** [RETURN] to initialize the volume. (p.234)
7. Accept the default MS-DOS values of cluster size, reserved sectors and directory entries. (p. 236)
8. **Press** [RETURN] to add the volume. (p. 236)
9. **Press** [SPACE] to exit or **press** A to continue adding volumes to the network. You will begin the process again with step 4.

The default volume access type is read-write. If you want to change access type to read-only, follow the steps outlined in the next section.

In step 9 on the previous page, **press** [EXIT] once and then:

1. **Press** C. (p. 238)
2. Enter the volume name and **press** [RETURN]. (p. 238)
3. **Press** [RETURN] to accept the volume name or **type** a new name and **press** [RETURN]. (p. 238)
4. **Type** RW and **press** [RETURN]. (p. 238)
5. **Press** [RETURN] again. (p. 238)

GRANTING USERS ACCESS TO VOLUMES

1. Select access manager from the volume manager menu. (p.245)

2. Select drive.

3. Enter user name. (p. 246)

4. Select grant volume access. (p. 247)

5. Enter volume name. (p. 247)

6. Select the type of access the user will have to the volume. (p. 248)

7. **Press** [RETURN] to leave the volume mounted or **type** U to unmount the volume. (p. 249)

8. **Press** [RETURN] to accept the mount unit number of 2, or **type** in a new value and **press** [RETURN]. (pp. 249-50)

9. **Press** [RETURN] to grant the user access to the volume. (p. 251)

10. **Press** [SPACE] to exit or **press** G to continue granting the user access to other volumes. You will begin the process again with step 5.

User or Device Manager

The user manager program is used to add or remove users or devices, change a user's attributes and list users or devices.

From the drive management main menu, **press** U for user and device manager. The screen displays:

ADDING USERS OR DEVICES

1. **Press A for add a user and device option.**

   The screen displays:

```
User Manager [x.xx]          DS SERVER
Add a user/device         Drive DRIVE1
----------------------------------
     U - User addition
     D - Device addition

     E - Exit
----------------------------------
Please select an option:
```

The device option is used to add system devices dedicated to a single task, such as a utility server.

A device is any piece of equipment on the network, i.e. a printer, a computer, or an OmniDrive. Device manager is generally reserved for listing active devices on the network and removing any faulty devices from the network.

2. **Select user addition.**

   The screen displays:

```
Please enter attributes of new user:

                                    Name:
```

3. **Enter the user name.**

   Type your first user name. The user name can be up to 10 characters and must begin with a letter. The rest of the name may be letters, numbers or any of the characters: _ - . # $ ' ( ) ^. No spaces are allowed between any of the characters. The system will capitalize letters in the name.

4. **Enter the user password.**

   The password can be up to 8 characters. The first character must be a letter. **Type** the password and **press** [RETURN]. Or just **press** [RETURN] if no password is desired.

5. Enter the home disk server.

The home disk server for MS-DOS users is the drive that contains the Constellation II volumes—IBMMS, IBMSYS, IBMBACK, and IBMBOOT—created during system generation. **Type** the server name **and press** [RETURN].

6. **Enter the boot operating system.**

   The default operating system type is MS-DOS. **Press** [RETURN] to specify MS-DOS as the user's operating system or **type** an alternate operating system from the list on the screen. The screen displays the attributes for the user you created and asks:

```
OK to add user (Y/N)? Y
```

7. **Add the new user.**

   Press [RETURN] to add the user. If you had changed your mind about adding the user, you could **press** N at this point.

   If you have more than one server, the screen prompts you to update all servers when adding the user. Unless you have a specific reason not to, *always* update the servers by accepting the suggested responses. After all servers are updated, or if you only have one server, the screen displays:

```
User added.
-------------------------------------------
Press <space> to continue, or
press  A  to add another user or device.
```

You have created the first user for your network. If you are adding more users, **press** A to add another user. Record the user names and passwords you have created in the User Table in Appendix B for future reference. Go to the next section to view a list of users you create for your network.

LISTING USERS OR DEVICES

The list users and devices option is a handy reference of user names and passwords. From the user manager menu, press L to list users alphabetically.

The screen display is similar to:

```
User Manager [x.xx]        DS SERVER
List users/devices      Drive DRIVE1
---------------------------------------

     User Name  Password Home DS  Boot type

  1. IBMUSER             SERVER   MSDOS
  2. IBMGR       HAI     SERVER   UCSD IV.0
  3. ROBERT      BUY     SERVER   MSDOS

  3 Users listed.

---------------------------------
 Press <space> to continue
```

The device list is similar to:

```
User Manager [x.xx]        DS SERVER
List users/devices      Drive DRIVE1
-------------------------------------
  DEV name        Type       Addr Home DS   Boot Type

1. SERVER      DISK SERVER    0   Server     Invalid

  1 device listed.

-------------------------------------
 Press <space> to continue, or
 press F to list to a file.
```

Consider listing users or devices to a file to have a record of all user or device names and passwords for future reference. If you have the P-system utilities (i.e. the filer, etc.), you can list to a file.

To list to a file,

- **Press** F

- **Type** volume:filename

- **Press** [RETURN].

The program will create a text file in the specified volume.

If you do not have P-system utilities, you can send the list to a **local** printer and have a hard copy of the record available at all times. To set the CONFIG.SYS file location parameter to L for a local printer, refer to the section "Setting the Network Printer Driver Parameters" in Chapter 8.

CHANGING USER ATTRIBUTES

The change user attributes option is used most frequently to change a password when a user suspects others know it.

The boot operating system can be changed, but there is no reason to do so. **Do not change the operating system assigned to any user whose name ends in MGR.** Otherwise, the system could lose all management capabilities and would require regeneration.

The user name cannot be changed with the user manager. To change a user's name, create a new user with the same attributes as the present user, but with a different name, then remove the old user name. Remember to grant the new user access to volumes.

REMOVING USERS OR DEVICES

When users no longer need network access, remove the user and the user's private volumes. To remove a user, choose the user manager main menu and **press** R for the remove option. **Type** the name of the user to be removed and confirm the removal.

Volume Manager

The volume manager can be used to add or remove a volume, change its attributes and list the directory of volumes.

From the drive management option, **press** V for volume manager. The screen displays:

```
Volume Manager [x.xx]                DS SERVER
Main Menu                          Drive DRIVE1
(C) Copyright 1982..1985 Corvus Systems, Inc.
-------------------------------------------
     A - Add a volume
     R - Remove a volume
     C - Change volume attributes
     L - List volumes
     X - Extended list
     F - Free space list
     H - Help
     E - Exit
-------------------------------------------
Enter VOLMGR function:
```

ADDING VOLUMES

This guide suggests that you create volumes that are 1024 blocks in size. To give you an idea of how large a 1024 block volume is, note that one double-sided 5 1/4" diskette formatted for MS-DOS is equal to approximately 720 blocks. Each block is equal to 512 bytes.

Refer to the list of volumes you want to create for your network. Remember to record the public and private volumes you create for your network in Appendix B.

1. Select add a volume.

The screen displays:

```
Volume Manager [x.xx]          DS  SERVER
Add a Volume                 Drive  DRIVE1
-----------------------------------------

Enter attributes of new volume:

                  Name:
```

2. Enter the volume name.

The volume name may be up to 10 characters and must begin with a letter. The rest of the name may be letters, digits or the characters _ - . # $ ' ( ) ^. No spaces are allowed between any of the characters. The system will capitalize letters in the volume name.

3. **Choose the volume type.**

   The program automatically suggests MS-DOS, which is the type you want to create for MS-DOS users. **Press** [RETURN] to accept MS-DOS as the volume type.

4. **Choose the volume size.**

   Specify the size of the volume in blocks. One block holds 512 bytes of information. Constellation II suggests 1024 blocks, about half a megabyte.

   For some application programs, such as data bases, you may want to create a volume that is larger than 1024 blocks. The largest volume you can make is 65,000 blocks.

   To accept the default size of 1024 blocks, **press** [RETURN].

5. **Choose the volume's starting location.**

   The volume's address, or location, on the OmniDrive is specified by block number. The program automatically suggests the address of a free area for the volume. The suggested volume location is the starting block address of the first location large enough for the specified volume. Accept it by **pressing** [RETURN].

6. **Initialize the volume.**

   The screen displays the attributes entered and asks:

```
Do you want to initialize the volume (Y/N)? Y
```

   New volumes must be initialized, that is, prepared for use. However, do not initialize a volume when upgrading Corvus mass storage systems from Constellation I to Constellation II software.

   Initializing sets up a directory that's compatible with the operating system, in this case, MS-DOS. During initialization, the directory within the volume is erased. **Press** [RETURN].

7. **Enter the MS-DOS attributes.**

   When you are initializing a volume, you will be prompted to accept the default values for typical MS-DOS volume configurations.

   When initializing DOS volumes, determine their cluster size, number of directory entries, and reserved sectors.

   For efficiency and ease of use, accept the suggested Corvus volume size of 1024 and the corresponding MS-DOS attributes of cluster size, directory entries, FAT sectors and reserved sectors. Or select a volume size that meets your requirements and let the software select the correct MS-DOS default value. The chart on the following page denotes the MS-DOS default values.

Cluster size, reserved sectors and directory entries are attributes of MS-DOS—not of Constellation II. Refer to the *IBM Disk Operating System Guide* for detailed descriptions of these MS-DOS attributes if you wish to change them.

A cluster is a file allocation unit. Cluster size is the number of sectors within that file allocation unit: 1, 2, 4, 8, 16, 32, 64, or 128. For most efficient storage, cluster size should be large enough to accomodate the size of an average file. If the volume will contain mostly small files, choose a small cluster size. A volume with many large files, for example an application program, should have a larger allocation size.

Reserved sectors are used by diskettes to store boot information and they are also required to run certain applications software. Corvus recommends that all volumes on the OmniDrive have 1 reserved sector.

Every file in a volume requires a directory entry. The larger the number of directory entries, the less space remains for storage. For maximum efficiency, the number of directory entries should be a multiple of 16. The maximum number of entries is 4080.

TYPICAL VOLUME CONFIGURATIONS

	Size (blocks)	Cluster Size	Dir Entries	FAT Sectors	Reserved Sectors	Capacity (kilobytes)
single sided diskette	360	1	64	1	1	180
suggested Corvus volume	1024	4	256	1	1	512
	4000	8	256	2	1	2000
	8000	8	256	6	1	4000
	16,000	8	256	64	1	8000

The screen displays:

```
Enter MSDOS attributes:
Cluster size [blocks]: 4
```

Press [RETURN]

The screen displays:

```
Reserved Sectors:  1
```

Press [RETURN]

The screen displays:

```
Directory entries:  256
```

Press [RETURN]

The screen displays:

```
OK to add volume (Y/N) Y
```

Press [RETURN]

The screen displays:

```
Header written.
Directory zeroed.
Volume added.
----------------------------
Press <space> to continue, or
Press A to add another volume.
```

You now have your first user volume on the drive. If you know what other volumes you want to create, **press** A to continue adding them. Record the volume names, contents, and general access type in the Volume Table in Appendix B. Go to the next section to set the general access type for the volumes you have created.

CHANGING VOLUME ATTRIBUTES

Only a volume's name and access type can be changed. Changing a volume's size, location or type requires removing the volume, then re-creating it with the desired attributes. To keep the current contents of the volume, it is necessary to copy the files onto diskettes. After re-creating the volume, transfer the old files back into it. Go to the chapter "Volume Backup and Restoration" in the *Network User's Guide for the IBM PC* for a complete discussion of this diskette transfer process. Or use the MS-DOS COPY command.

To change a volume's name or access type, **press** C for the change volume option on the volume manager main menu. The screen will display the volume's size and location, which can not be changed. The current access—read-only, read-write or not accessible—will appear automatically on the screen. Accept the current access by **pressing** [RETURN] or change it by **typing** a new access.

The volume manager designates volumes as read-write when they are created. Use the change volume option to reset the access to read-only or not accessible.

Volumes designated read-only cannot be written to by any user, even if read-write access is granted to that user.

LISTING VOLUMES AND FREE SPACE

The list volumes option shows each volume's name, starting address, length in blocks, access and type. An X in the RW column denotes read-write access.

The example on the following page shows only UCSD and MS-DOS volumes, but all volumes on the OmniDrive system will be displayed.

The screen will show the OmniDrive's total number of free blocks, the total free areas with their sizes and locations and the largest single area of free space. The screen also will show the total number of volumes, the total allocated blocks and the largest volume on the drive.

From the volume manager main menu, **press** L to list the volumes on the OmniDrive system.

The screen display is similar to:

```
Volume Manager [x.xx]          DS SERVER
List Volumes                 Drive DRIVE1
-----------------------------------------------

    Volume    Address Length  RW Type
 1. BLKS.0..7       0      8  -  Reserved
 2. BLKS.8..8       8      1  -  Reserved
 3. CORVUS          9    300  -  UCSD
 4. IBMMS         309   1024  -  MSDOS
 5. TRADE        1333   1024  x  MSDOS
    <UNUSED>     2357  38622

     Total free blocks on drive:   38622
      Total free areas on drive:       1
    Largest free space (blocks):   38622

        Total volumes on drive:       3
Total blocks allocated on drive:    2348
   Largest volume size (blocks):    1024
-----------------------------------------------
Press <space> to continue, or
Press F to list to a file.
```

The extended list option shows other volume attributes for a particular volume type.

Press X for the extended volume list.

The screen display is similar to:

```
Volume Manager [x.xx]          DS SERVER
Extended Volume List         Drive DRIVE1
-----------------------------------------------

  List volumes of which type?

  Select from:
    CCOS
    CPM
    DOS3.3
    Macintosh
    ProsDOS
    SOS
    UCSD

-----------------------------------------------
```

Enter the desired operating system. For example,

Type MSDOS

Press [RETURN]

The screen display is similar to:

```
Volume Manager [x.xx]          DS SERVER
Extended Volume List         Drive DRIVE1
------------------------------------------------------------

Volume  Vol size Clstr size Resrv sctrs Dir entries FAT sctrs
IBMMS       1024       4          0         256         1
TRADE       1024       4          1         256         1

     Total free blocks on drive:   38622
      Total free areas on drive:       1
    Largest free space (blocks):   38622

        Total volumes on drive:       3
Total blocks allocated on drive:    2348
   Largest volume size (blocks):    1024
------------------------------------------------------------
Press <space> to continue, or
Press F to list to a file.
```

Use the free space list option to display only the free space on the system and its location.

From the volume manager main menu, **press** F to list the free space on the OmniDrive.

The screen display is similar to:

```
Volume Manager [x.xx]      DS SERVER
Free Space               Drive DRIVE1
---------------------------------------

         Volume    Address Length  RW Type
         <UNUSED>     2357  38622

      Total Free Blocks on drive:   38622
       Total Free areas on drive:       1
     Largest free space (blocks):   38622

---------------------------------------
Press <space> to continue, or
Press F to list to a file.
```

REMOVING VOLUMES

Remove a volume when a user is deleted from the system or when certain volume attributes are to be changed.

Removing a volume erases access to all files within it. **Do not remove the volume CORVUS.** This volume must remain on the system because it contains the tables used to manage all users and volumes.

From the Volume Manager program, select the *remove a volume* option. **Type** the name of the volume to be removed and confirm the volume's removal. The volume manager removes the volume and all users' access to that volume. Remember to tell all users on the system that the volume has been deleted and that they will no longer have access to that particular volume.

Access Manager

The access manager program grants a user access to volumes. The program also removes access from a volume, changes access or lists volume access. Remember to record in the Individual User Account Table in Appendix B the access each user has to specific volumes.

GRANTING USERS ACCESS TO VOLUMES

To use the access manager, enter the Constellation II main menu and select the drive management option.

1. **Select the access manager.**

   The screen displays:

```
Access Manager [x.xx]          User
Next User                        DS SERVER
                               Drive DRIVE1
-------------------------------------------
 Enter user name:
```

2. **Enter the user name.**

After you **type** the user name and **press** [RETURN], the screen displays the access manager menu:

```
Access  Manager [x.xx]          User ROBERT
Main Menu                         DS SERVER
                                Drive DRIVE1
(C) Copyright 1982..1985 Corvus Systems, Inc.
-------------------------------------------

        G - Grant volume access
        R - Remove volume access
        C - Change volume access

        L - List volumes accessible

        N - Next user
        H - Help
        E - Exit

-------------------------------------------
 Please select an option:
```

3. **Select grant volume access.**

The screen displays:

```
Access Manager [x.xx]          User  Robert
Grant Volume Access              DS  SERVER
                              Drive  DRIVE1
---------------------------------------

Please enter:

      Volume name:
```

4. **Enter the volume name.**

Grant all MS-DOS users access to IBMMS since you placed the Corvus utilities in it during system generation. You can also have other public volumes that all users can share. Make it a habit to grant access to IBMMS and any other public volumes first when setting up each user account so you won't forget. **Type** a volume name and **press** [RETURN].

5. **Select the type of access.**

   The computer asks whether your user should have read-write (RW) or read-only (RO) access to IBMMS and suggests read-only. **Press** [RETURN] to accept the suggested access, because only one user should have R/W access to a volume (and IBMUSER already has it for volume IBMMS).

   If the access manager and volume manager do not agree on a volume's access, the most restrictive access (read-only) takes precedence. For example, if the access manager grants a user read-write access to a volume but the volume was created as read-only, the user will have read-only access to that volume.

6. **Mount the volume to make it accessible.**

   The first volumes that will be mounted for the user are the volumes that are on the home server (if there are ten mounted volumes on that server). If there are less than ten volumes mounted on the home server, the computer will check for other servers on the network and mount volumes from each server until a total of ten volumes are mounted or until all volumes in the account are mounted.

   A volume to which a user is granted access but is unmounted is referred to as an inactive volume. The user can mount an inactive volume temporarily with the Corvus mount manager program. Please refer to the *Network User's Guide for the IBM PC* when you have completed this guide.

   Press M to mount the volume or **press** U to leave it unmounted. Selecting unmounted finishes the process of granting volume access. Choosing to mount a volume, will cause the screen to prompt for a unit number.

7. **Assign the volume a unit number.**

   The hardware configuration determines the first unit letter available for volumes on an OmniDrive. The IBM PC reserves unit letters A-B for floppy drives. Each floppy or hard disk drive thereafter reserves one unit letter. The volume mounted on unit number 2 (the default value) by the network manager will be mounted on the first drive available after units are assigned for floppy or hard disk drives. For example, for an IBM XT with two floppy drives (A and B) and a hard disk drive (C), the first available drive is D.

If all 10 of the user's unit letters are occupied, the user can mount an inactive volume on an active volume's unit letter. To do this, the file allocation table (FAT) sectors—an MS-DOS attribute of the inactive volume—must be equal to or less than the number of FAT sectors of the active volume that is being unmounted. Refer to the *Network User's Guide for the IBM PC* when you have completed this guide.

Unless you have some reason to mount the volume on a particular drive specifier, accept the default of 2 and **press** [RETURN]. The default of 2 automatically mounts the volume on the first available unit.

The screen displays:

```
OK to grant volume access (Y/N)?Y
```

7. **Grant access to the volume.**

   Press [RETURN] to grant the access. The screen displays:

```
Access granted
----------------------------------
Press <space> to continue, or
Press G to grant another volume.
```

8. **Continue granting access to other volumes.**

   To continue setting up network user accounts, repeat these steps until the specified user has access to all the volumes you want. Note that in step 5 you should grant R/W access to private volumes, not R/O access. When finished, exit to the Constellation II main menu.

LISTING VOLUME ACCESS

From the access manager main menu, **press** L to see a list of the volumes to which a user has access, their mount units, access type, and operating system.

The screen display is similar to:

```
Access Manager [x.xx]          User STEVEN
List Volumes                  Server SERVER
                               Drive DRIVE1
-------------------------------------------
   Volume      Unit    RW    Type

 1. IBMMS       C            MSDOS
 2. TRADE       D       x    MSDOS

 Number of volumes accesible : 2.
-------------------------------------------
Press <space> to continue, or
press F to list to a file.
```

CHANGING VOLUME ACCESS

From the access manager main menu, **press** C for the change volume access option that changes the type of access a user has to a volume. It is possible to change the access type, mount status, and mount unit.

Type the volume name and **press** [RETURN].

The screen automatically suggests the volume's current access. To keep it, **press** [RETURN]. Otherwise, **type** RO for read-only or RW for read-write and **press** [RETURN].

Next the screen automatically suggests the volume's current mount status. To keep the current status, **press** [RETURN]. Otherwise, **press** M for mounted or U for unmounted and **press** [RETURN].

If the volume is unmounted, the process is finished.

If the volume is mounted, the screen automatically suggests the current mount unit. To keep the current unit, **press** [RETURN]. Otherwise, **type** the new number, then **press** [RETURN].

Changes made while the user is on the system take effect only after the user reboots or uses the mount manager program.

REMOVING VOLUME ACCESS

From the access manager main menu, **press** R to select the remove volume access option that removes a volume from a user's access table. **Type** in the name of the volume and confirm the choice. To remove the access, **press** Y and [RETURN]. To cancel the program, **press** N and [RETURN].

Semaphore Manager

A semaphore is the means by which an application program can signal that it is writing information to the drive. If an application program has semaphore set capacity, the semaphore is set or locked when the first user begins writing to the volume or file. Once the semaphore is locked, other users using the same application program on the network cannot write to the file or volume. When the first user is finished writing , the semaphore is automatically unlocked and the volume or file is ready to be written to by the next user who has access to the volume.

This section on Semaphore Manager will show you how to unlock, lock, clear and list semaphores.

DRIVE MANAGEMENT ERROR -107

If you selected a drive and received the Constellation II error -107, the Constellation II semaphore was left locked. This section explains the drive management error and how to unlock the CRVSEMA4 semaphore.

If two computers write to the drive management tables at the same time, everything on the OmniDrive could be lost. Semaphores prevent two people from writing simultaneously to the drive management tables.

A power failure or rebooting while still in the drive management program causes a semaphore to remain locked. The semaphore will lock out the network manager if he tries to re-enter the program after a power failure or rebooting.

When the network manager tries to re-enter the program with the semaphore still set, the screen displays the following error message:

```
Constellation error -107
Corvus utility already in use on selected drive.
Type <space> to continue...
```

Follow the steps in the next section to enter semaphore manager and then go to the section "Unlocking a Semaphore" to unlock CRVSEMA4, the drive management semaphore.

ENTERING THE SEMAPHORE MANAGER

To use the Semaphore Manager, enter the Constellation II main menu. Select the Maintenance Utilities program.

Press M

The screen displays:

```
Corvus Utility [x.xx]
Maintenance Utilities
(C) Copyright 1982...1985 Corvus Systems, Inc.

------------------------------------------------
    D - Mass Storage Diagnostic
    O - Omninet Test

    P - Pipes Management
    F - Semaphore Management

    M - Multiplexer Management

    S - Select Drive
    L - List Drive
    E - Exit

------------------------------------------------
Please select an option:
```

Press F

The screen display is similar to:

```
Corvus Utility [x.x]              Server:
                                  Drive:

Enter drive information:

Valid servers are:      SERVER00
Entering server name:   SERVER00
Drive name:             DRIVE1
Drive password:         DRIVE1


Loading program PARMGR


Initializing...
```

The screen display is similar to:

```
PARMGR [x.xx]:  Corvus Semaphore Management
(c) Copyright 1982..1985 Corvus Systems, Inc.

    D - Display active semaphores
    L - Lock a semaphore
    U - Unlock a semaphore

    C - Clear all semaphores

    E - Exit

-----------------------------------------------

Select semaphore option:
```

LOCKING A SEMAPHORE

This section describes how to lock a semaphore.

To lock a semaphore,

Press L

The screen displays:

```
Lock which semaphore?
```

Enter the name of the semaphore you want to lock.
For example, to lock a semaphore called FLAG,

Type FLAG

Press [RETURN]

The screen displays:

```
Semaphore FLAG was not set, is now locked.
```

The semaphore will remain locked, until it is unlocked with the *Unlock semaphore* option.

Return to the Drive Management program by **pressing** [EXIT] twice.

UNLOCKING A SEMAPHORE

There are a few instances in which you would need to unlock a semaphore, but the most common instance involves the drive management semaphore, CRVSEMA4.

In order to enter the drive management program, the drive management semaphore, CRVSEMA4, must be unlocked. To unlock a semaphore, follow the instructions below.

From the Semaphore Manager program,

Press U

The screen display is similar to:

```
Unlock which semaphore?
```

Enter the name of the semaphore to unlock. For example, to unlock the drive management semaphore,

Type CRVSEMA4 **and press** [RETURN]

The screen displays:

```
Semaphore CRVSEMA4 was set, is now unlocked.
```

When entering the drive management semaphore name, CRVSEMA4 should be in upper case characters.

Return to the Drive Management program by **pressing** [EXIT] twice.

LISTING SEMAPHORES

The *Display Active Semaphores* option can be used to list the semaphores that are currently locked.

From the Semaphore Manager program,

Press D

The screen display is similar to:

```
List of locked keys:

1. FLAG
```

Return to the Drive Management program by **pressing** [EXIT] twice.

CLEARING ALL SEMAPHORES

The *Clear All Semaphores* option can be used to clear all the existing semaphores. This option has the same effect as unlocking a semaphore, except that it unlocks or clears all the current semaphores that are set.

From the Drive Management program,

Press C

The screen displays:

```
OK to clear all keys? [Y/N]: N
```

Press Y

The screen displays:

```
Semaphore table initialized.
```

All semaphores are now cleared from the semaphore table.

Return to the Drive Management program by **pressing** [EXIT] twice.

What's Next?

You have created volumes and users and given users access to particular volumes on your network system. Your network should be set up with the number of volumes and users you wanted and with both public and private volumes. Go to Chapter 8 if you want to create the pipes area so that your users can exchange information among similar and dissimilar computer types and can share printers and drives.

PART TWO
Chapter 8

Network Printing and File Transfer

Contents

267 **Introduction**

270 **Creating the Pipes Volume**

271 **Setting the Network Printer Driver Parameters**
272 Editing the CONFIG.SYS File

276 **Setting up an IBM PC to Print Files**
277 Setting the Despool Parameters
282 Sending a Test File to the Network Printer

285 **Maintaining the Pipes Area**
287 Listing Pipes
289 Purging Pipes
290 Closing Pipes
291 Removing the Pipes Area
291 Restoring the Pipes Area

292 **What's Next?**

Introduction

This section introduces you to the concepts of printing and transferring files on your network.

What is the difference between a local and a network printer?

A local printer is attached directly to the port of one computer. Only users who operate that computer can print material on that printer.

A network printer can be attached to a computer or to a printer server. The network printer can be shared by several users who operate their own computers. Users can send files to the network printer through the pipes area.

What is the pipes area?

The pipes area is a special volume that you will create and initialize in order to set up its data structure so that it will receive and temporarily hold files. The pipes area directory recognizes the files as *pipes* and acts as a way station for files before they are picked up by the network printer or by a computer.

How do you send files to the pipes area?

The network printer driver allows users to send files to the pipes area from within MS-DOS applications, such as word processing. If your application program has a print function, you can use that command to print on the network. Otherwise, you can use the MS-DOS PRINT command, the Corvus NPR, or SPOOL program to print files. You can also use the MS-DOS Print Screen command to print a screen. All methods for sending files to the pipes area will be discussed in detail in the *Network User's Guide for the IBM PC.*

A *pipe* is a file that is in the pipes area. The pipes area is transparent to the user who only sees that he is sending a file directly to a printer.

What is the network printer driver?

The network printer driver is a mechanism that intercepts files that would ordinarily be sent to a local printer. It redirects the files to the pipes area. The network printer driver replaces the standard device drivers, PRN and LPT1, and the print interrupt program (described in the IBM *Disk Operating System* guide) which are normally used by the IBM PC.

The network printer driver has several parameters, three of which need to be set by the network manager. These parameters determine which server on the network will have a pipes area, whether the printer should be local or network, and what the pipe name should be.

How do you despool files from the pipes area to a network printer?

This chapter will show you how to set up a computer as a despooling device to retrieve files from the pipes area and to send them to a network printer. You will also despool a test file to the network printer.

The methods for despooling files from the pipes area to another user on the network is discussed in detail in the *Network User's Guide for the IBM PC.*

If you have a Corvus Printer Server, complete the steps in the section "Creating the Pipes Area" in this chapter. Then refer to the *Printer Server Manager's Guide for the IBM PC* to set up your printer server.

Creating the Pipes Volume

In this section you will create and initialize the pipes area.

1. **Enter drive management and select volume management.**

2. **Identify the OmniDrive that will hold the pipes volume.**

3. **Select the add a volume option.**

4. **Enter the volume name (PIPES).**

5. **Enter the volume type.**

   Type UCSD **and press** [RETURN].

6. **Accept the default size of 1024 blocks for the volume.**

   Press [RETURN].

7. **Choose the location for the volume.** (The address must be less than 32,000 blocks.)

   Press [RETURN].

8. **Initialize the volume.**

   Press [RETURN].

9. **Initializes the pipes area.**

   Press [RETURN]

   The pipes area is ready for use. Go to the next section to set the parameters for the network printer driver.

Setting the Network Printer Driver Parameters

Since the network printer driver is on each user's boot diskette, the network manager must ensure that the parameters are set properly before boot diskettes are created and distributed to network users. The key to setting network printer driver parameters is the CONFIG.SYS file.

There are several network printer driver parameters. Because the user may want to set his own parameters for his personal *Corvus Boot Diskette*, all of the parameters are discussed in the *Network User's Guide for the IBM PC*. However, the network manager is required to read both guides. This guide discusses the three following parameters:

The **server parameter**—determines the name for the server that contains the pipes area. The default server name is that of the user's home server. If you have more than one server and users whose home server does not have the pipes area on it, you will need to set this parameter to the server with the pipes area. If not, you do not need to change this parameter.

The **location parameter**—is set at the default N to send files to a network printer. If you wish to send files only to a local printer, you need to set this parameter to L for local printer.

The **printer parameter**—sets the pipe name to which the file is sent. The default value is the pipe name PRINTER. Whatever pipe name you choose, make sure it matches the name you select in the section "Setting the Despool Parameters."

If the default values for these network printer driver parameters are the values you wish to use, you do not need to edit the CONFIG.SYS file.

If you need to change parameters, go to the next two sections to use MS-DOS EDLIN to set the network printer driver parameters.

EDITING THE CONFIG.SYS FILE

The CONFIG.SYS text file—copied onto the *Corvus Boot Diskette* during system generation—installs the network printer driver. The overall function of the CONFIG.SYS file is discussed in detail in the *IBM Disk Operating System* guide.

Your network may require parameter values that are different from the default values. By editing the command line for the network printer driver you can change the parameters so that they are set up at boot time for a user. The parameters will not change until you or a user changes them again.

To set the parameters in the CONFIG.SYS file, you can use the MS-DOS EDLIN program which is described in detail in the *IBM Disk Operating System* manual. Or you can use any word processing or text editing program to edit the file.

Remember to save the edited CONFIG.SYS file to each user's boot diskette. You can save the file to one Corvus Boot Diskette and make copies for users. Write protect all diskettes after making changes.

A parameter name identifies which parameter the command affects. Parameter values set the parameter. To change the default value for a parameter, add the parameter name and the new parameter value to the command line using the following format:

DEVICE=NETPRINT.BIN■/parameter:parameter_value

The slash (/) indicates the start of each new parameter. The parameter must follow directly after the slash. The colon (:) must follow the parameter and precede the parameter value. A box ■ indicates that a space must be placed here.

Examples:

DEVICE=NETPRINT.BIN■/PRINTER:PRINTER1

DEVICE=NETPRINT.BIN■/SERVER:SERVER00

If a user wishes to change parameters temporarily so that when he reboots he will return to the original values specified by the CONFIG.SYS file, he can use the CNP program which is discussed in detail in the *Network User's Guide for the IBM PC.*

THE SERVER PARAMETER

Use the server parameter to set the server name to the one that contains the pipes area. Enter S as the parameter and the server name—for example—SERVER00, as the parameter value.

DEVICE=NETPRINT.BIN■/SERVER:SERVER00

THE LOCATION PARAMETER

The location parameter determines if the file is sent to the network pipes area or to a local printer. The default value is N for the network printer.

The parameter may have one of two values: N for network printer, or L for local printer. For example to print exclusively to a local printer you would enter the command line as follows:

DEVICE=NETPRINT.BIN■/LOCATION:L

THE PRINTER PARAMETER

The printer parameter sets the pipe name to which the file is sent. The pipe name can direct the file to a network printer, or it can indicate a pipe that will be despooled by another user on the network. The default value is pipe name PRINTER.

Use the printer parameter if the network printer has not been assigned the pipe name PRINTER. For example, if the pipe name for the network printer is DIABLO, enter

DEVICE=NETPRINT.BIN■/PRINTER:DIABLO

If all three parameters need to be changed, the command line might look like this:

```
DEVICE=NETPRINT.BIN■/SERVER:SERVER00/
LOCATION:L/PRINTER:DIABLO
```

Setting up an IBM PC to Print Files

This section assumes that you have more than one computer on your network.

Attach the printer to the IBM PC that will run the despool program. Connect the printer by following the manufacturer's instructions in the printer manual. You want the computer port's communication protocols to match those of the printer. Check your printer guide to find the values of the printer's protocols, then refer to the "MODE Command" section in the *IBM Disk Operating System* guide to set the computer's protocols so that they match those of the printer. If you have a serial printer, you will also need to use the "MODE Command" section in the IBM guide to change the default printer from LPT1 to COM1. **Set the location parameter to L for local printer in the CONFIG.SYS file—refer to the previous section in this chapter, "Setting the Network Printer Driver Parameters."**

An IBM PC can be a dedicated computer—one that is used only for the purpose of despooling files to a printer. If you have a network that will use the network printer often, consider using a dedicated computer or a Corvus printer server.

An IBM PC can also run the despool program when not running other programs. If you have to use a computer that runs the despool program temporarily, inform the network users what times the computer will be running the despool program so that unprinted files will not remain in the pipes area if the despool program is off. Each time you exit and enter the despooling program, you must reset the despool parameters.

SETTING THE DESPOOL PARAMETERS

After you have connected your printer to the IBM PC that will run the despool program, use the *Corvus Boot Diskette* to log on to the IBM with the printer as IBMUSER with the password HAI.

The screen display should be similar to:

```
Corvus --- IBM driver CORDRV [x.x] installed.

Installing Corvus Printer Driver NETPRINT [x.xx] for the IBM PC.
Using Printer "PRINTER" and Disk Server "SERVER00."
NETPRINT installed.

Current date
```

1. **Enter the new date and time and the DOS prompt appears.**

2. **Change the drive from drive A to the drive that contains the IBMMS volume. For example, on an IBM PC with two diskette drives, the volume would be found on drive C.**

   Type c:

   Press [RETURN]

3. **Select the despool utility.**

From the DOS system prompt,

Type n:DESPOOL

Press [RETURN]

The letter *n*, is the unit letter for the volume containing the system volume IBMMS.

The screen displays the despool main menu:

```
Copyright 1983 Corvus Systems, Inc.
All Rights Reserved

Corvus Despool Utility [x.xx]
Main Menu
-----------------------------------------
    D - Despool a file

    C - Change despool parameters

    H - Help

    E - Exit
-----------------------------------------
Please select an option: _
```

4. **Select the change parameters option.**

   Press C

   The screen displays the change parameters menu:

```
Corvus Despool Utility [x.xx]
Change Parameters
-----------------------------------------
    P - Pipe name                  : PRINTER
    O - Output device              : PRINTER
    L - Do you want <lf> after <cr> : YES
    S - Single page printing       : NO
    E - Exit to main menu
-----------------------------------------
Please select an option: _
```

5. **Select the pipe name option.**

   Press P

   The despool program automatically will look for pipes with the name PRINTER. If this is the name of the pipe you set in the CONFIG.SYS file on the *Corvus Boot Diskette*, **press** [RETURN]. Otherwise, **type** the correct name and **press** [RETURN].

6. **Select the output device option.**

   Accept the default name of PRINTER for the output device option.

7. **Adjust the print options.**

   Select the appropriate settings for the insert linefeeds and single page printing options.

   When a carriage return is in the file to be printed, some printers will automatically insert a linefeed. Other printers will keep returning to the beginning of the same line. Consult the printer manual to see whether the printer automatically advances the page one line after each carriage return.

   If the printer automatically inserts a linefeed when it sees a carriage return, change the linefeed option to *no* by **pressing** L.

   If you are feeding paper one sheet at a time, change the single page printing option to *yes* by **pressing** S.

   Press E to return to the despool program main menu.

8. **Press** D

The screen display is similar to:

```
Corvus Despool Utility [x.xx]
Despool a file
----------------------------------------

Currently despooling pipe named:  PRINTER

Pipe number                    :  1

........

8 blocks read from pipe 1 named PRINTER
```

The despool program searches the pipes area for pipes with the current pipe name. When it finds a pipe, the program removes it from the pipes area and prints it.

Go to the next section to send a test file to the network printer.

SENDING A TEST FILE TO THE NETWORK PRINTER

Log on to an IBM PC that does not have a printer attached. Use the name IBMUSER with the password HAI.

The screen display should be similar to:

```
Corvus --- IBM driver CORDRV [x.x] installed.

Installing Corvus Printer Driver NETPRINT [x.xx] for the IBM PC.
Using Printer "PRINTER" and Disk Server "SERVER00."
NETPRINT installed.

Current date
```

1. **Enter the new date and time and the DOS prompt appears.**

2. **Change the drive from drive A to the drive that contains the IBMMS volume. For example, on an IBM PC with two disk drives, the volume would be found on drive C.**

   Type C:

   Press [RETURN]

3. **Type** npr index.doc

   Press [RETURN]

   The screen displays:

```
1 File(s) copied
```

You have just sent a file to the pipes area. To learn more about the NPR command, refer to the *Network User's Guide for the IBM PC.*

Check your network printer to see if the index file of the NPR command was printed. If not, check to see that your printer is attached correctly to your IBM PC. Check to see if you set your network printer driver parameters correctly and that you set your despool parameters correctly. Try using NPR and the despool program to send the index file to the network printer again.

Go to the IBM PC that is acting as a despooling device. After the pipe is despooled, the despool program returns to search for more pipes that have been spooled with the name PRINTER.

If you have an IBM PC acting as a dedicated despooling device, stop here.

If you need to use the IBM PC that is a temporary despooling device for other purposes now, go to step 4.

4. **When finished despooling, exit the despool program.**

   Press [SPACE]

   Press E

   The screen displays the DOS system prompt.

Maintaining the Pipes Area

With time, mislabeled files may clutter the pipes area and reduce the amount of useful space. Periodically check and clean the pipes area by deleting the files. Log on as IBMGR. The Constellation II main menu is displayed.

1. **Select the maintenance utilities.**

   Press M

   The screen displays the maintenance utilities main menu.

2. **Select the parameter manager option.**

   Press P

3. **Identify the mass storage system containing the desired pipe area.**

   Type the names entered during system generation.

   Once the system is identified, the screen displays the parameter manager main menu.

4. **Select the pipes option.**

   Press P

   The screen displays the pipes menu.

1. **Select the option to list active pipes.**

   Press L

   The screen lists all pipes in the pipes area. The display is similar to:

```
Active pipes are:

1. PRINTER  Open    Read  Contains data   53 blocks
2. PRINTER  Closed  ---   Contains data   25 blocks
3. STEVE    Open    Read  Contains data   10 blocks
4. SMTIH    Closed  ---   Contains data   12 blocks
5. SMITH    Open    Write Contains data    6 blocks
6. LETTER   Open    Read  Contains data    0 blocks

Press <space> to continue
```

   In the example above, the list gives the status of each pipe and its size. Pipes are either open or closed. Only closed pipes can be despooled. An open pipe is either being written to, or being read from the pipes area. If a pipe is open, and its size does not change, it is faulty and must be purged.

Pipe 1 has the pipe name PRINTER. The file is open and probably is being despooled by the printer. If you list the pipe area again and the pipe's size in blocks has decreased, the pipe is being despooled.

Pipe 2 is waiting to be despooled once pipe 1 finishes.

Steve is probably despooling pipe 3. Again, confirm this by listing the pipe area a second time to see if the size has decreased. If the size remains the same, the pipe is not being despooled and should be purged.

A user accidentally transposed the letters in SMITH when he spooled the file in pipe 4 with the name SMTIH. This pipe is taking up space and should be purged.

A user is spooling the file in pipe 5. He should soon finish spooling and the pipe will close. If a second listing does not show more blocks or list the pipe as closed, the pipe may have a problem. Either close the pipe or purge the pipe and spool it again. Closing a pipe does not ensure that the file is complete.

It appears the printer finished despooling pipe 6, but the pipe is still open. Purge the pipe if it remains on the list.

2. **Continue the program.**

   Press [SPACE]

   The screen displays the pipes menu.

PURGING PIPES

1. **Purge a pipe.**

   Press P

   The screen displays:

```
Purge which pipe? [pipe number]:
```

   Choose which pipe to purge. **Type** the number of the pipe to be purged and **press** [RETURN].

   The screen display is similar to:

```
Pipe 4 purged

Press <space> to continue
```

   Press [SPACE]

   The screen returns to the pipes menu.

CLOSING PIPES

If a pipe remains open and its status does not change, you may need to close the open pipe.

1. **Close an open pipe.**

   Press C

   The screen displays:

```
Close which pipe? [pipe number]:
```

   Type the pipe's number **and press** [RETURN].

   The screen display is similar to:

```
Pipe 5 closed

Press <space> to continue
```

   Press [SPACE]

   The screen returns to the pipes menu.

2. **Once all pipes are closed in the pipes area, return to the Constellation II main menu.**

   To resume printing, return to the despool program.

REMOVING THE PIPES AREA

If the pipes area becomes corrupted, it must be removed and replaced. To remove a pipes area, enter Drive Management and then enter the Volume Management program. Select R, for the remove a volume option, and type the name of the pipes area that you are removing. Confirm the removal of the pipes area.

RESTORING THE PIPES AREA

After removing the pipes area, you can restore it by following the steps in this chapter's section "Creating the Pipes Volume."

What's Next?

Congratulations! You have designed and set up a network system with the amount of users and private and public volumes you need. You have initialized your pipes area and have the capacity to exchange information among users and to share printers.

Your next step is to read the *Network User's Guide for the IBM PC.*

Appendix A

Error Messages

Constellation II Boot and Logon Errors

"Duplicate host number."

Cause—This error is the result of having more than one Omninet device set to the same Omninet address.

Action—Check each device and set each one to a unique address. Run Omninet Test to verify address settings.

_***_

"No disk server found."

Cause—When attempting to boot onto the network a server could not be located.

Action—Check to see if the device is turned on and connected to the network. Run Omninet Test to determine if the device address is located on the network.

_***_

"User not found."

Cause—The user name entered at the Constellation log-on screen is not defined in the Constellation II user table.

Action—Re-enter the name to verify that it is typed correctly. If typed correctly, verify through the Constellation II User Manager that the name is defined. On multiple server networks, be sure the user table is identical on all servers.

_***_

"Incorrect password."

Cause—The password entered is incorrect for the user name entered.

Action—The user should check with the network manager for his correct password.

_***_

"Home server not found."

Cause—The home server for the user name entered does not appear on the network.

Action—Check to see that the user's home server is present on the network and is turned on.

—***—

"Boot volume not found."

Cause—The boot volume for the user's operating system cannot be located.

Action—Check to see if the Omnidrive is turned on. Check the network connections by running Omninet Test. The boot volume may be corrupted—restore XXXBOOT volume (where XXX is the type of computer in use). Examples: IBMBOOT or A2BOOT from backup.

—***—

"Unable to load operating system."

Cause—Operating system files may be corrupted or missing.

Action—Copy the operating system files or restore from backup. Try another user name that uses the same operating system but has different volumes mounted.

—***—

"User's operating system type not supported."

Cause—The user is not identified with the operating system supported by the computer. For example, an MS-DOS user cannot log on as an Apple user.

Action—Check with the system manager and re-enter user name on the proper operating system.

—***—

Operator Errors

100 Network station address range is 0 to 63
101 Drive not found
102 Number of users cannot exceed...
103 Invalid name
104 Invalid input parameter option
105 Invalid password
106 Unused
107 Corvus utility already in use on selected drive
108 Option is valid only on drive 1
109 Invalid operating system type
110 Invalid server type
111 Invalid directory type
112 Invalid computer type

Volume Errors

120 Volume not found
121 Volume already exists
122 Volume is not mounted
123 Illegal volume type
124 Invalid volume size
125 Illegal volume starting address
126 No space on drive for volume
127 Invalid volume specification
128 Image not found
129 Image already exists
130 No space on drive for image
131 Source image is larger than destination

Corvus Volume Errors

140 Invalid Corvus volume directory block
141 Corvus volume table not found
142 Volume directory full
143 Volume full
144 File/Volume space exhausted - crunch volume
145 Table full
146 Search fail
147 Delete fail
148 Exceed ability to maintain table information
149 Entry already exists
150 List fail
151 End of table marker
152 Failed to replace an entry
153 Drive I/O error or Slot I/O error
154 Error in BLOCKREAD
155 Error in BLOCKWRITE
156 Unable to execute program

Boot File Errors

160 Boot file not found
161 File specified is not a Corvus boot file
162 Error reading/writing boot file
163 Corvus Driver not installed
164 System must boot from Constellation II environment
165 Has duplicate transporter address on the network
166 Failed to copy system files from floppy

User Manager Errors

180 User not found
181 User has no access to volume
182 User already has access to volume
183 Invalid access specifier
184 Unused
185 Invalid unit specifier
186 Attempt to unmount system volume
187 Unable to grant READ/WRITE access to volume
188 User already exists

Spool Errors

200 WARNING: Include file not found
201 Spooling device not available
202 WARNING: Line too long at line...
203 Pipe name too long. (8 characters max)
204 No PIPES volume found on drive 1

Pipe Errors

8 Tried to read an empty pipe
9 Pipe was not open for read or write
10 Tried to write to a full pipe
11 Tried to open (for reading) an open pipe
12 Pipe does not exist
13 The pipe data structures are full
14 Illegal pipe command
15 Pipes area not initialized

Semaphore Errors

253 Semaphore table is full
254 Error reading or writing semaphore table

Appendix B

Network Manager's Records

Introduction

This appendix contains four tables for you to keep a record of your network.

The *User Table* will help you keep track of how many users are on your network and the name of their passwords, operating system types, and home disk servers.

The *Volume Table* is a record of volume names, addresses, size, public or private status, access type (R/W or R/O), and their operating system types.

The *Omninet Device Table* is a list of all of your network devices—eg. printers, OmniDrives, computers, etc.—and their names and passwords.

The *Individual User Account Table* is a record table for each user to keep track of which volumes are accessible to him and which mount unit these volumes are on.

Make copies of each of these tables and use the originals as templates for future copies. You might want to collect these tables in a manager's notebook for your records.

User Table

User Name	Password	OS Type	Home Disk Server
			SERVER01

Volume Table

Volume Name	Address	Size	Public	Access	OS Type

Omninet Device Table

Device Type	Omninet Address	Name	Password

Individual User Account Table

User Name:		Password:	
Volume Name	Mount Unit	Access	OS Type

Appendix C

CORMS33
Files

Introduction

CORMS33 contains the Constellation II MS-DOS drivers and MS-DOS utilities. This appendix describes each utility.

INDEX TO CORMS33

1. INDEX.DOC

   This index file.

2. CORDRV.BIN

   The Corvus-IBM (PC, XT, AT) MS-DOS (version 2/3) attachable disk driver. This driver provides the system dependent resources needed by MS-DOS as well as Corvus MS-DOS programs to use the Corvus network and disk drives.

   NOTE: DO NOT use the DISKCOPY, SYS, or FORMAT programs with a Corvus volume as the result is unpredictable and data could be destroyed. To copy files when Corvus volumes are involved, use the COPY command or some other file oriented copy program.

3. NETPRINT.BIN

   The Corvus-IBM (PC, XT, AT) MS-DOS (version 2/3) attachable printer driver. This driver allows programs to communicate to a network printer in the same manner as a local printer connected directly to the machine.

   If you already have a release of the Corvus Constellation II software for the IBM PC, the NETPRINT.BIN driver replaces the SPLDRV.BIN driver.

4. PBOOT.DAT

   A data file used by CORDRV.BIN when logging onto the disk management utilities that run under the UCSD p-system.

5. CNP.COM

   This program allows you to change the parameters of the NETPRINT driver.

   If you already have a release of the Corvus Constellation II software for the IBM PC, the CNP.COM program replaces the CSD.COM program.

6. NPR.BAT

   This batch file will send a text file to the network printer specified in the NETPRINT driver. To select a printer, run the program CNP.COM. The command format is: NPR [d:] [path] filename.

7. SHOWMT.COM

   Shows the drive unit assignments of mounted Corvus volumes.

8. SPOOL.EXE

   Sends files or data to the Corvus PIPES area (see DESPOOL.EXE). Can be used to send a file to a network printer.

9. DESPOOL.EXE

   Receives files or data from an operating system independent storage area on a Corvus drive called the PIPES area. DESPOOL, used with SPOOL, can be used to pass data between different operating systems for different computers on a Corvus network.

10. MNTMGR2.EXE

    A program to change the mount status of volumes accessible to the user on the network. Once the user has logged onto the network, this program can change the way accessible volumes are mounted (i.e. assigned units) on the various MS-DOS logical drive units (A, B, C etc.).

11. SEMA4.PAS and SEMA4.EXE

    A sample program written with the Microsoft-IBM Pascal compiler. It shows how to use the SEMAPHORE facility provided by the Corvus drives.

12. DRIVEC2.DOC

    Document file describing the support services provided by the Corvus drive interface unit, DRIVEC2.OBJ.

13. DRIVEC2.OBJ

    Module that can be linked to an application providing an interface to the Corvus drive.

14. MAKEDISK.BAT

    MS-DOS batch file that copies files needed to make a Corvus boot diskette. The command format is MAKEDISK.

Appendix D

Upgrading Methods

Introduction

This appendix is aimed at those network managers who already have Constellation II software for the IBM PC and who wish to upgrade from MS-DOS 2.0 or greater *or* from an older version of Constellation II to the new Constellation II software.

The advantages of the new Constellation II utilities include the ability to create 32 megabyte volumes (instead of 16 MB) and to create a larger (1424 blocks instead of 1024) IBMSYS volume. With the larger IBMSYS volume, network managers can add Corvus software to their network system without worrying about running out of space in the IBMSYS volume.

MAKING THE CORVUS BOOT DISKETTE

Everyone must make the Corvus Boot Diskette in order to upgrade MS-DOS utilities and before upgrading to new Constellation II utilities. Make a new Corvus Boot Diskette by following the steps in Chapter 2 under the section "Making the Corvus Boot Diskette."

The procedure for making boot diskettes requires a blank floppy. Reuse the existing boot diskettes rather than using blank floppies to avoid having different versions of the Corvus Boot Diskette.

UPGRADING TO NEW CONSTELLATION II UTILITIES

If you are upgrading to new Constellation II utilities, first make the Corvus Boot Diskette. There are two ways to upgrade your system. To decide if you will use Method One or Two to upgrade your Constellation II utilities, enter drive management and select volume manager. List the volumes on your drive and note whether the volume IBMSYS is 1024 or 1424 blocks in size. If IBMSYS is 1424 blocks, use Method 1. If IBMSYS is 1024, use Method 2.

METHOD ONE

Follow these steps to upgrade your Constellation II utilities:

1. Back up the data on your OmniDrive. If you have a Corvus Bank or Mirror Server refer to their respective guides to follow instructions to back up data. You can also use the BACKUP command described in the *IBM Disk Operating System* guide if you have MS-DOS version 2.0 or greater.

2. Boot your IBM PC with the Corvus Boot Diskette and log on as IBMGR with the password HAI.

3. Enter drive management.

4. Enter the access manager program.

5. Select the *List Volumes Accessible* option.

6. Enter the user name IBMGR.

7. Make sure that the IBMSYS, IBMBACK, and IBMBOOT volumes are mounted on units and have read-write access.

8. If the volumes are not mounted or do not have R/W access , use the *Change Access* option to mount the volumes and to give them read-write access.

9. Exit the access manager program.

10. Exit the drive management program.

11. If you followed step 8 to change volume attributes, reboot the computer and log on again. Otherwise, go to step 12.

12. Enter the maintenance program.

13. Select the *Update Utilities* option.

14. The screen will prompt you to insert the updated diskette. Insert CORMS31 and **press** [SPACE]. After CORMS31 is copied, the screen will prompt you to insert CORMS32. Insert CORMS32 and **press** [SPACE]. After CORMS32 is copied, your Constellation II utilities will be updated.

15. Turn your OmniDrive off, wait ten seconds, and then turn it on again. Wait until only the ready light remains lit.

16. Log on as IBMGR with the password HAI.

17. Enter the drive management program.

18. Enter the boot manager program.

19. Select the *Remove a boot file* option.

20. **Type** BOOT.IBMPC. If you have more than one server, answer yes when prompted to update all servers.

21. Select the *Add a boot file* option.

22. **Type** BOOT.IBMPC. If you have more than one server, answer yes when prompted to update all servers.

Your network now has the new MS-DOS 3.0 utilities and the new Constellation II utilities.

METHOD TWO

Method Two involves reinitializing the OmniDrive. *The first and most important step is to back up all the data currently on the OmniDrive. The Constellation II system volumes will be re-created when you run the system generation program again, but the other volumes and all the data in them will be destroyed.*

Follow these steps to upgrade your Constellation II utilities:

1. Back up the data on your OmniDrive. If you have a Corvus Bank or Mirror Server refer to their respective guides to follow instructions to back up data. You can also use the BACKUP command described in the *IBM Disk Operating System* guide if you have MS-DOS version 2.0 or greater.

2. Boot your computer with the Corvus Boot Diskette and log on as IBMGR with the password HAI.

3. Enter the user manager program.

4. Select the *List Users* option and record the attributes of all your present network users. **Press** [EXIT] twice.

5. Enter the access manager program and record each user's access table. Exit the program.

6. Enter the volume manager program.

7. Select the *Extended List* option. Record the information for each volume.

After you are certain that all the data is backed up and all the lists are complete, go to Chapter 2 under the section "Preparing for Constellation II" to prepare for the new version of Constellation II. Then go to the section "Initializing the OmniDrive" to initialize the OmniDrive.

When you enter the server and drive numbers for the OmniDrive that is to be reinitialized, you will see a warning message that the OmniDrive is already initialized. After ensuring once again that all the data is backed up and all the lists are complete, continue the system generation procedure. Be sure to select the standard configuration in step 10 so the new system volumes and files will be created.

After the OmniDrive is reinitialized, go to the section "Making the Corvus Boot Diskette" to make the new Corvus Boot Diskette. Follow procedures in "Copying Constellation II Utilities " to copy the new files to IBMMS.

Then log on as IBMGR. If you backed up your volumes to a floppy, begin the process of re-creating the volumes and user accounts. **Do not re-create the volumes CORVUS, IBMSYS, IBMMS, IBMBACK, or IBMBOOT. Do not re-create the users IBMGR, IBMBACKUP, TEMP or IBMUSER.** When the volumes are all in place, restore the data to them.

If you used the transfer manager program to transfer your volumes to the Bank, transfer each volume individually to your OmniDrive. Then re-create the users and give them access to the proper volumes.

Your network now has the new MS-DOS 3.0 utilities and the new Constellation II utilities.

Appendix E

Corvus
Technical Documents

Introduction

Listed below are some of the technical documents available from Corvus Customer Service that can be used to supplement the network manager guide.

Companion Technical Reference Manual

This manual provides a description of the processor, memory, video output circuitry, Omninet Transporter, serial port, keyboard interface circuitry, and all other system electronics used by the Companion. Part Number: 7100-06219-01

Constellation Software General Technical Information

This guide provides a description of the Constellation software. Covering the Constellation I, II and III data structures, Constellation drivers, booting and logon procedures, and the Constellation II management utilities. It also covers the operating system specific details of each implementation supported by Corvus. This manual is is required for Omninet software developers. Part Number: 7100-05944-01

Corvus Mass Storage Systems General Technical Information Guide

This guide provides a description of the command protocols used by Corvus mass storage systems. It covers the disk commands and the Omninet protocols used to send those commands. This manual is intended to be used with the *Omninet Local Area Network General Technical Information Guide*. This manual is necessary for Omninet software developers. Part Number: 7100-05945-01

IBM XT Mirror Card Programming Reference Guide

This short document describes the drivers, addressing, and other protocols used by the XT Mirror. It is intended to be used with the *Mass Storage General Technical Information Guide.* Part Number: 9000-00073-00

Network Diagnostics Guide for the IBM PC

This guide discusses the mass storage diagnostic program for OmniDrives. The mass storage diagnostic program is used to detect and correct hardware and software problems that may develop in an OmniDrive. Part Number: 7100-06658-02

Network User's Guide for the IBM PC

This guide explains how to use the Constellation II MS-DOS utility programs "spool," "despool," and "mount manager." It also discusses methods of backing up data on an OmniDrive. Part Number: 7100-06072-02

Omninet Hardware Installation Guide

This guide is a planning and procedural aid for installing the Omninet network hardware. It covers pre-installation power requirements and provides complete guidelines for the Omninet installation. This guide is written for the non-technical person and is recommended for all customers installing the Omninet network. Part Number: 7100-07188-01

Omninet Local Area Network General Technical Information Guide

This manual provides an introduction to the Omninet local area network as well as an in-depth explanation of its technical aspects. It describes both hardware and internal software but DOES NOT discuss high level networking software. This manual is necessary for Omninet software developers. Part Number: 7100-06614-01

Corvus Service Manuals

The Corvus Service Manuals describe how to troubleshoot and repair various Corvus products. They are written for the service technician and assume a knowledge of basic electronic repair procedures and the availability of test equipment.

Service Manual	Part Number	Price
OmniDrive	7100-05687-00	$69.95
H-Series Drives	7100-04704-00	$69.95
6-MB Drive	7100-04703-00	$69.95
11/20-MB Drives	7100-03347-00	$69.95
Network Service Manual (Utility Server, Disk Server and Multiplexer)	7100-04700-00	$69.95
The Bank	7100-05219-00	$69.95
Mirror	7100-03345-00	$59.95

The above documents can be purchased by contacting Corvus Customer Service Administration.

Appendix F

Corvus Software Development Kits

Introduction

New software developer kits are now available from Corvus. The new kits are available for the following computers:

Computer	Part Number
IBM MSDOS	9000-00139-00
IBM NCI p-System	9000-00140-00
Apple II Pascal	9000-00141-00
Apple II CP/M	9000-00142-00
Apple II Dos 3.3	9000-00143-00
Apple II ProDos	9000-00144-00
DEC Rainbow CP/M 80-86	9000-00145-00
DEC Rainbow MSDOS	9000-00146-00
Apple III Pascal	9000-00147-00

Each kit includes the following:

- o Omninet Local Area Network General Technical Information.
- o Corvus Mass Storage Systems General Technical Information.
- o Constellation Software General Technical Information.
- o Appropriate software where needed.
- o Appropriate supplemental documentation where needed.

The retail price is $125.00 for each of the above kits.

INDEX

A

Access Manager 245-53
  Granting users access to volumes 245-51
    Mounting volumes 249
    Unit numbers 249
  Changing volume access 253
  Listing volume access 252
  Removing volume access 253

B

Boot 8

C

Constellation II
  Entering 212
  Logging on 212
  Corvus Boot Diskette 212
  IBMGR 212
  HAI 212
Convenience connector 10
  Attaching to tap cable 22, 30
CORMS33 Files 309-12
Corvus Software Development Kits 327-28
Corvus Technical Documents 321-26

D

Default 8
Device Manager 222-29
  Adding Devices 223-27
  Listing Devices 228-29
  Removing Devices 230
Drive Management
  Entering 215
  Error -107 254

E

Error messages
  Boot File Errors 300
  Constellation II Boot and Logon Errors 294-97
  Corvus Volume Errors 299
  Drive Management Error -107 254
  Operator Errors 298
  Pipes Errors 301
  Semaphore Errors 301
  Spool Errors 301
  User Manager Errors 300
  Volume Errors 298

F

G

H

Home disk server 225

I

IBM PC
  Access port 27
  Removing cover 26
  Tap cable, attaching 28

J

K

L

List
  to a file 229
  send list to a local printer 229

M

Mass storage system
Menus
  Overview, 205-06

N

Network 8
Network Checklist 218-221
  Creating User Accounts
    Adding Users 218
    Adding Volumes 219-220
    Granting Users Access to Volumes 221
Network Manager's Notebook 204
Network Manager's Records 303-08
  User Table 305
  Volume Table 306
  Omninet Device Table 307
  Individual User Account Table 308
Network Summary 204

O

OmniDrive 8
  Bias switch 19
  Convenience connector 22
  Device address 18
  Power switch 23
  Ready light 23, 31
  Setting up 17
  Switch unit 18
  Tap cable, attaching 21
Omninet 8

P

PC 8
Pipe 268
Pipes Area 267
  Creating 270
  Despool files from 269
  Maintaining the 285-91
    Closing Pipes 290
    Listing Pipes 287-88
    Purging Pipes 289
    Removing the pipes area 291
    Restoring the pipes area 291
  Sending files to 268
Printing
  Commands 268
  Local printer 267
  Network printer 267
  Network printer driver 268
    Parameters, *definition*, 271
      Setting the 271-75
      Editing the CONFIG.SYS file 272-75
  Sending a Test File to the Network Printer 282-84
  Setting the Despool Parameters 277-81
  Setting up an IBM PC to Print Files 276

Q

R

Reboot 8

S

Semaphore Manager 254-63
  Drive management error 254-55
    CRVSEMA4 255, 260
  Entering the semaphore manager 256
  Clearing all semaphores 263
  Listing semaphores 262
  Locking a semaphore 259
  Unlocking a semaphore 260
Server 8

T

Transporter card 24
  Installing 24-29
  Switch unit 24

U

Upgrading Methods 313-20
  Making the Corvus Boot Diskette 314
  Upgrading to New Constellation II Utilities 315
    Method One 315-17
    Method Two 318-319
User Accounts
  Access
    general access type 202
    private account 202
    read-write 202
    read-only 202
    user's access type 202
  Active 203
  Inactive 203
  Mounted 203
  Unmounted 203
  Users 201
    password 201

U

User Manager 222-230
Adding Users 223-27
Changing User Attributes 230
Listing Users 228-29
Removing Users 230

V

Volumes 199-200
Cluster size 235
Directory entries 235
File allocation unit 235
Reserved sectors 235
Pipes Area 200
User Volumes 200
Public 200
Volume Manager 231-44
Adding Volumes 232-37
Changing Volume Attribrutes 238
Listing Volumes and Free Space 239
Extended list 240
Free space 242
Removing Volumes 244

W

X

Y

Z

Corvus Systems, Inc. / 2100 Corvus Drive / San Jose, CA 95124 / 408/559-7000 / Telex: 278976

Corvus Systems, Inc. / 2100 Corvus Drive / San Jose, CA 95124 / 408/559-7000 / Telex: 278976